1 Door, external side
2 Door, internal side
3 Cabinet assy and additional bracket
4 Electric system
5 Hydraulic system
6 Sugar and spoons dispenser
7 Cup dispenser
8 Mixer and canister
9 Grinder doser unit
10 Coffee unit
11 Tea unit
12 Tea unit - Turkey
13 Instant hydraulic system
14 Self-feeding kits
15 Pin and connectors

Door, external side

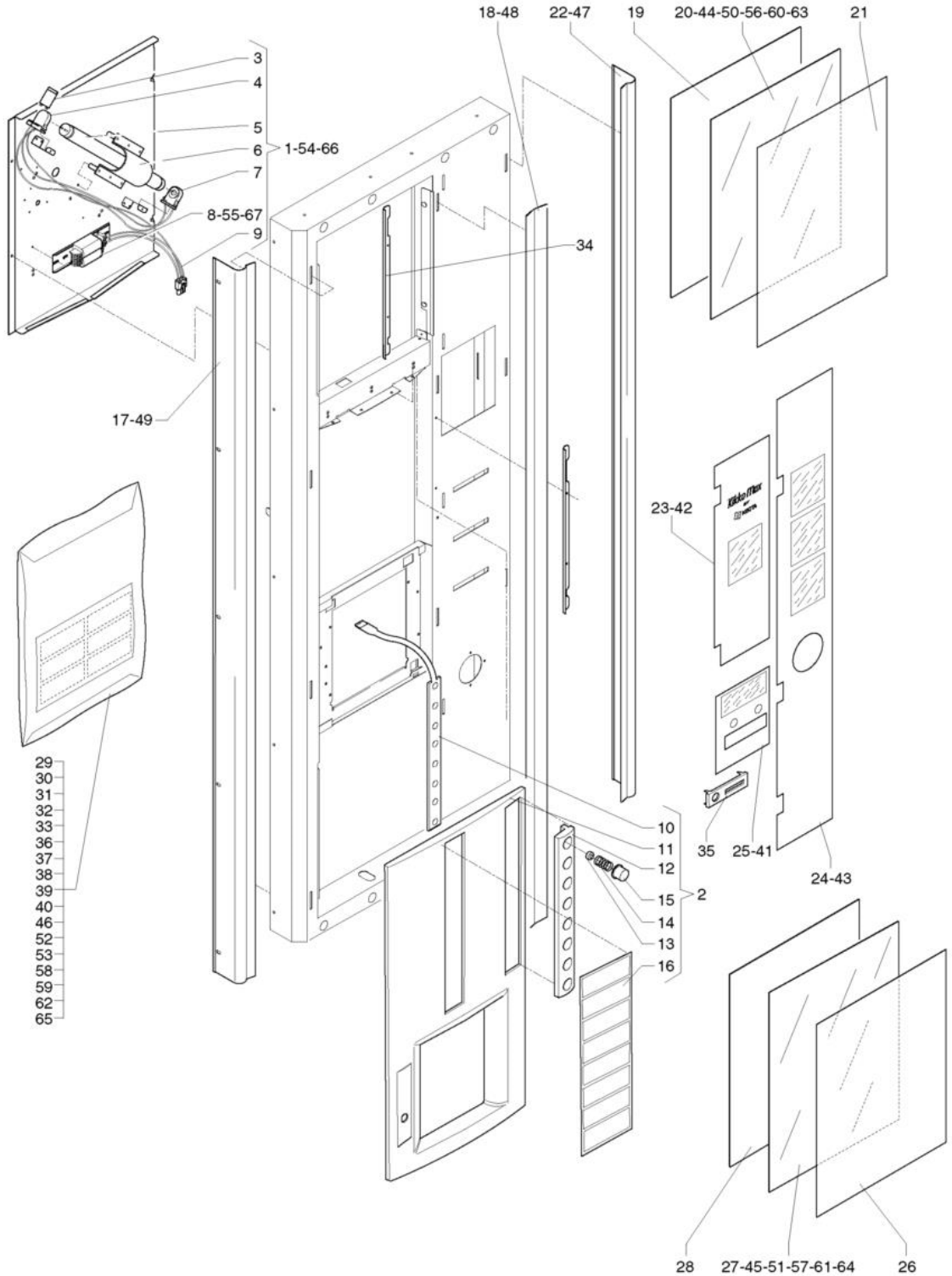

posLbl	Item	Description
0001	252009	ASSEMBLY LAMP PANEL
0002	252007	CONTROL PANEL COMPLETE
0003	091802	STARTER TYPE S10
0004	987958	LAMP-HOLDER W/STARTER-HOLDER
0005	099152	LAMP
0006	0V2468	LAMP PROTECTION
0007	099783	LAMP-HOLDER
0008	251736	BALLAST EEI=B2 230V-50HZ
0009	250175	PANEL LAMP WIRING
0010	252004	MEMBRANE CONTROL PANEL
0011	251986	PUSH-BUTTON-PANEL SUPPORT
0012	251992	BADGE BUTTONS
0013	0V2134	SELECTION BUTTON SPACER
0014	0V2034	SELECTION BUTTON SPRING
0015	251990	PUSH BUTTON
0016	252000	PRODUCT LABELS SUPPORT
0017	251985	LEFT PROFILE
0018	251983	CENTRAL PROFILE
0019	251994	UPPER ELEMENT
0020	251971	UPPER PHOTOGRAPHY
0021	251995	UPPER TRANSPARENT PANEL
0022	251984	RIGHT PROFILE
0023	252001	INTERFACE UPPER LABEL
0024	251999	INTERFACE LOWER LABEL
0025	251998	INTERFACE CENTRAL LABEL
0026	251997	LOWER TRANSPARENT PANEL
0027	251972	LOWER PHOTOGRAPHY
0028	251996	LOWER OPAL-GLASS
0029	250170	NEUTRAL LABELS
0030	252083	PRODUCT LABELS-E/P/MEX-
0031	0V3367	PRICE PLATE - EURO 0,01-
0032	250171	DOOR INSTRUCTION LABEL -D-
0033	251973	PRODUCT PLATE-I/F-
0034	252061	PANEL SQUARE
0035	250480	COIN INSERT PLATE
0036	252153	PRODUCT LABELS -D/CZ-
0037	252154	PRODUCT LABELS -UK/S/AUS/USA-
0038	099242	PRICE-LABEL 'UK' N°2
0039	0V2596	DOOR LABEL-HOLDER (UK)
0040	252371	PRODUCTS LABELS-PL / RUS / RO-
0041	252589	INTERFACE CENTRAL LABEL-SILVER
0042	252588	UPPER DOOR LABEL WITHOUT POCK ET-SILVER-
0043	252590	LOWER DOOR LABEL WITHOUT POCK ET-SILVER-
0044	252586	UPPER PHOTOGRAFIC PANEL- SELECTA-

posLbl	Item	Description
0045	252587	LOWER PHOTOGRAFIC PANEL- SELECTA-
0046	252689	PRODUCTS LABELS -B/NL-
0047	252317	RIGHT PROFILE -BLACK-
0048	252316	CENTRAL PROFILE -BLACK-
0049	252318	LEFT PROFILE -BLACK-
0050	252319	UPPER PHOTOG.PANEL-NESTLE'-PL-
0051	252320	LOWER PHOTOG.PANEL-NESTLE'-PL-
0052	253356	PRODUCT LABEL -ISRAEL/GREECE-
0053	253356	PRODUCT LABEL -ISRAEL/GREECE-
0054	253558	ASSEMBLY LAMP PANEL 240V-UK/AUS-
0055	253517	BALLAST EC18240V 50HZ
0056	254641	UPPER PHOTOGRAFIC PANEL -UVENCO-
0057	254642	LOWER PHOTOGRAPHIC PANEL -UVENCO-
0058	254643	PRODUCT LABELS -UVENCO-
0059	0V2348	DOOR LABEL-HOLDER -F-
0060	253772	UPPER PHOTOGRAPHIC PANEL -ARGETA-
0061	253773	LOWER PHOTOGRAPHIC PANEL -ARGENTA-
0062	253774	PRODUCT LABEL -ARGENTA -ITALIA
0063	253803	UPPER PHOTOGRAPHIC PANEL -LIOMATIC-
0064	253804	LOWER PHOTOGRAPHIC PANEL -LIOMATIC-
0065	253805	PRODUCT PLATE -LIOMATIC-
0066	254680	ASSEMBLY LAMP PANEL -220V-60HZ-
0067	253401	BALLAST220V-60HZ

Door, internal side

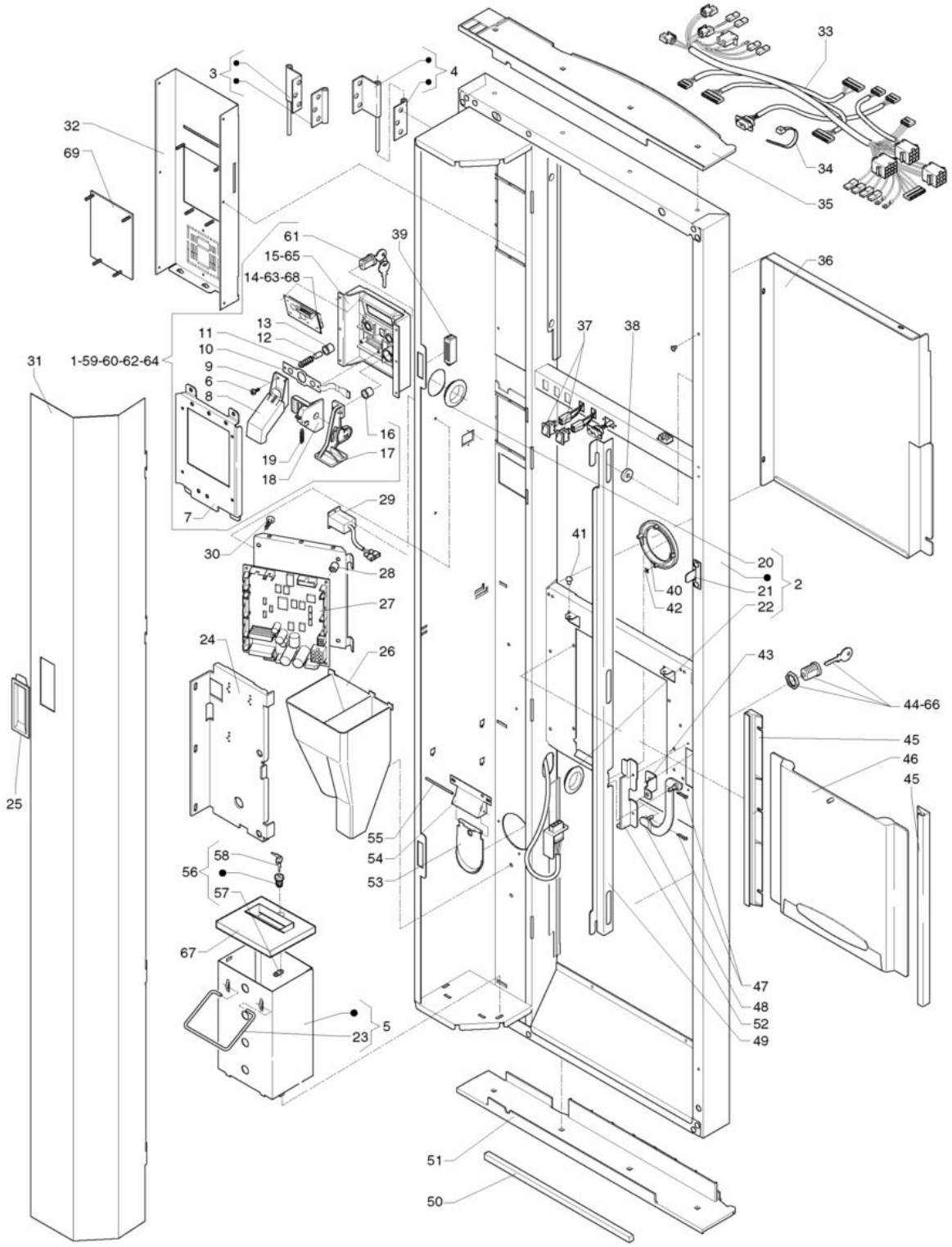

posLbl	Item	Description
0001	252008	ASSEMBLY COIN INSERT PIECE
0002	252014	DOORFRAME
0003	0V3675	LEFT DOOR HINGE
0004	0V3674	RIGHT DOOR HINGE
0005	252010	COIN-BOX
0006	255034	PLAIN TIP SELF-TAPPING SCREW 4X12
0007	251976	DISPLAY ELEMENT
0008	251993	COIN INTRODUCTION CHUTE
0009	250502	FIXED COIN INTRODUCTION CHUTE
0010	0V4243	PRESEL. MEMBRANE PUSH-BUTT.PANEL
0011	250158	PUSH-BUTTON SPRING
0012	250159	PUSH-BUTTON ACTUATOR
0013	0V2071	COIN RETURN BUTTON
0014	251658	DISPLAY 4X20 BLUE-EXCLUSIVE-
0015	252155	DISPLAY SUPPORT
0016	250506	COIN RETURN BUTTON
0017	251987	COIN RETURN LEVER
0018	0V3706	LEVER SUPPORT
0019	987839	RETURN SPRING
0020	093916	WHIPPING OVAL
0021	0V3646	DOOR SWITCH ACTUATOR
0022	098600	CHOCK
0023	0V3128	COIN BOX HANDLE
0024	251975	COIN MECHANISM SUPPORT
0025	0V3659	HANDLE
0026	0V4122	COIN CASHING/RETURN CHUTE
0027	252436	16 BIT CPU BOARD 4MB
0028	0V1431	SPACER
0029	0V2284	SCALER 24 VOLT
0030	097175	CARD SPACER
0031	251974	BOX COVER
0032	252006	PAYMENT UPPER ELEMENT
0033	252003	DOOR WIRING
0034	090148	CLIP
0035	251988	UPPER HEAD
0036	251979	COVERING
0037	097807	BUTTON
0038	0V2047	LOCK ROD SPACER
0039	250182	MAGNET
0040	0V2073	DARK GREY COIN RETURN FRAME
0041	098833	BUFFER
0042	093829	LEVER LOCK CLIP
0043	0V4217	LOCK LATCH BOLT
0044	099905	LOCK RIELDA-MOD.503-

posLbl	Item	Description
0045	0V3703	SLIDER GUIDE
0046	251991	COFFEE EXIT SHUTTER
0047	093342	COTTER 2X15 UNI
0048	252005	BOLT REFERENCE
0049	251980	DOOR LOCKING
0050	251515	ADHESIVE SEAL (A METER)
0051	251989	LOWER HEAD ELEMENT
0052	251981	LOCK PROTECTION
0053	093890	MONEY RETURN SHUTTER
0054	097455	MONEY RETURN SHUTTER BRACKET
0055	093891	SHUTTER PIVOT
0056	090861	CYLINDER LOCK TYPE K
0057	098551	BOLT
0058	092218	PASSE-PARTOUT LOCK K
0059	253584	ASSEMBLY COIN INSERT PIECE-GR-
0060	252156	COIN INSERT PIECE-JUG FACILITIES
0061	099743	FREE VEND SWITCH
0062	252322	COIN INSERT PIECE-CIRILLICO-
0063	252321	DISPLAY 4X20 BLUE-CIRILLICO-
0064	252591	SILVER COIN INSERT -JUG FACILITIES
0065	252592	DISPLAY SUPPORT ASSEMBLY-SILVER
0066	099043	LOCK TYPE'N'PREFER
0067	0V3177	CASHBOX COVER
0068	251958	LCD DISPLAY -GREECE
0069	253712	STOPPER FOR PAYMENT ELEMENT

Cabinet assy and additional bracket

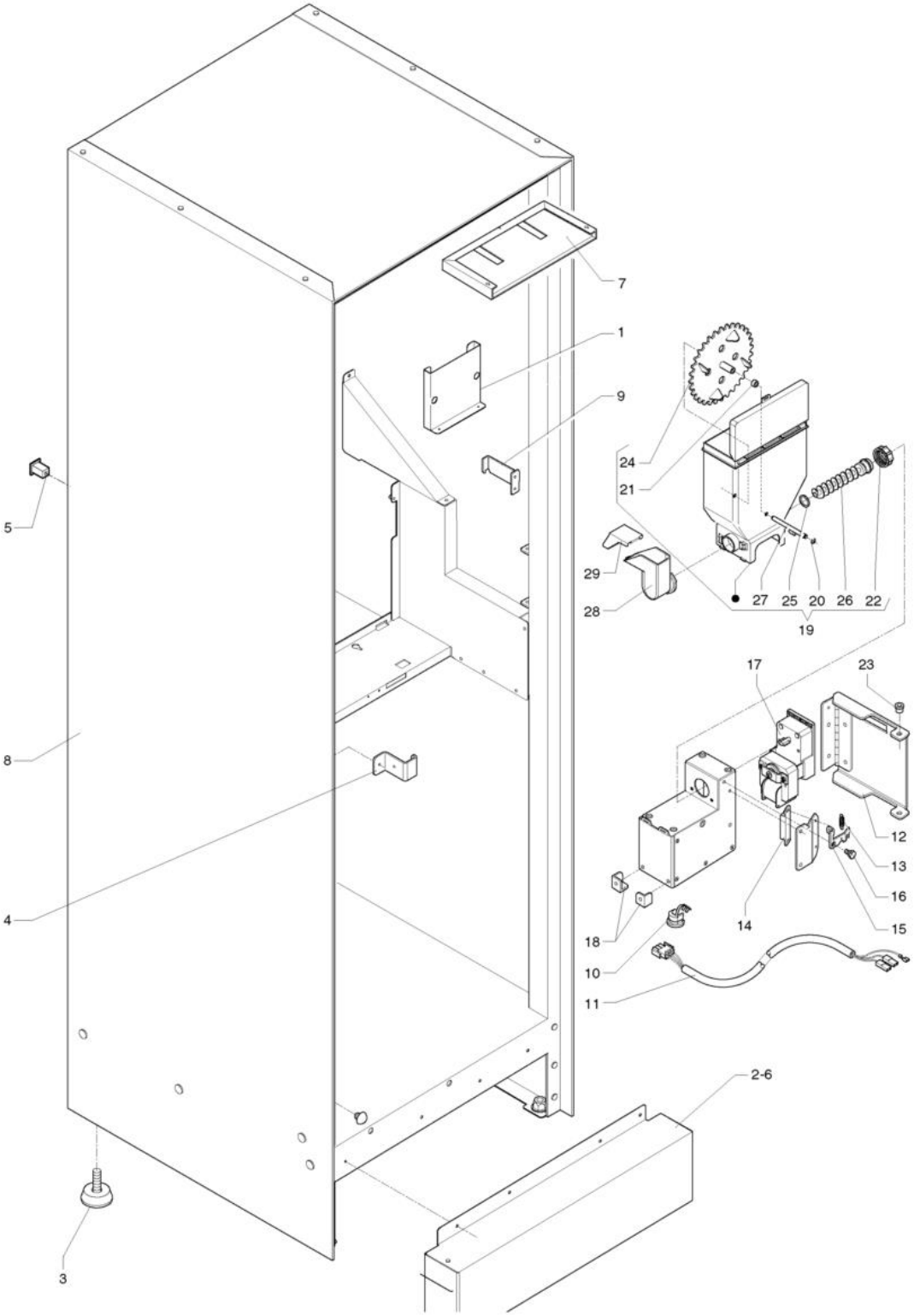

posLbl	Item	Description
0001	0V3639	PIPE GUIDE
0002	252013	FOOT-COVER
0003	252124	4 FEET KIT
0004	0V3632	LOCK COUPLER BRACKET
0005	094111	INSULATING DOLLY BLOCK
0006	252593	FOOT-COVER-SILVER-
0007	250219	DOCUMENTATION HOLDER
0008	252778	KIKKO MAX CABINET
0009	255563	SHELF PIN STOP
0010	096653	ANTITEAR WHIPPING
0011	255566	"SOLUBLE POWDER CONTAINER WIRING"
0012	255567	HINGED ARM
0013	987839	RETURN SPRING
0014	097508	LOCKING MAGNET
0015	255562	SHELF LOCK LEVER
0016	090615	COLLAR SCREW
0017	0V2555	MOTORDOSER 52 G/M
0018	255598	EDGE PROTECTION
0019	252903	CONTAINER WITH WHEEL
0020	091959	BENZING COLLAR DIAM 4MM
0021	098812	SPACER
0022	095849	CONTAINER RING NUT
0023	097606	EFFECTER BUSH
0024	250269	TOOTHED WHEEL
0025	095829	GASKET O-RING
0026	0V2562	SHORT SCROLL L=7.8CM
0027	0V1962	PIN FOR WHEEL
0028	255564	LH POWDER CONVEYOR
0029	255565	POWDER CONVEYOR LID

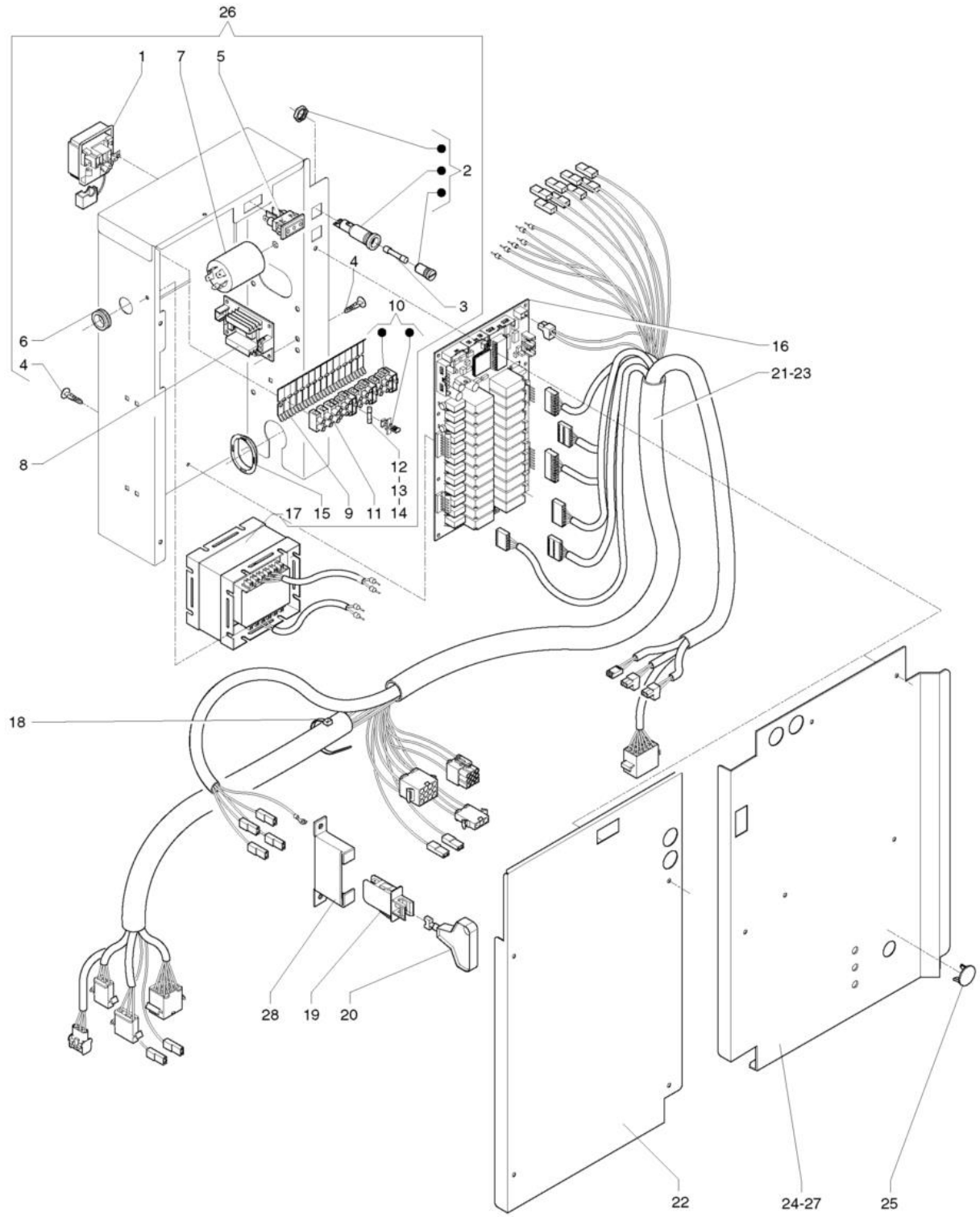
26
1
7
5
2
4
3
10
6
4
8
16
21-23
12
13
14
17
15
9
11
18
28
19
20
22
24-27
25

posLbl	Item	Description
0001	098796	TERMINAL BOARD
0002	0V3201	FUSE HOLDER
0003	095636	FUSE 15 A
0004	097175	CARD SPACER
0005	096921	POWER POINT 10 AMP
0006	093312	WHIPPING DIAM MM 12 ART 46
0007	0V3512	ELECTRICAL NET FILTER
0008	0V2143	BOILER CONTROL BOARD
0009	097242	SUB-TERMINAL BOARD
0010	097241	3-POLE TERMINAL BOARD W/CARRIER
0011	098793	5P TERMINAL BOARD WITH FUSE-HOLDER
0012	096922	FUSE 5X20 800M AMP
0013	096923	FUSE 5X20 1 AMP DELAYED ACTION
0014	097259	FUSE 5X20 4A DELAYED ACTION
0015	093916	WHIPPING OVAL
0016	252437	16 BIT CONTROL BOARD 4MB
0017	0V0014	G49/25-25V TRASFORMER
0018	090148	CLIP
0019	097796	SWITCH
0020	0V1654	SWITCH KEY
0021	252002	GENERAL WIRING
0022	251978	ELECTRICAL PANEL COVER
0023	252018	INSTANT MAIN WIRING
0024	252017	ELECTRICAL PANEL COVER-INSTANT
0025	0V1636	PLUG D.25
0026	251924	ELECTRICAL PANEL-KIKKO-
0027	252532	ELECTRICAL PANEL COVER-TEA VERSION-
0028	254850	SWITCH HOLDER

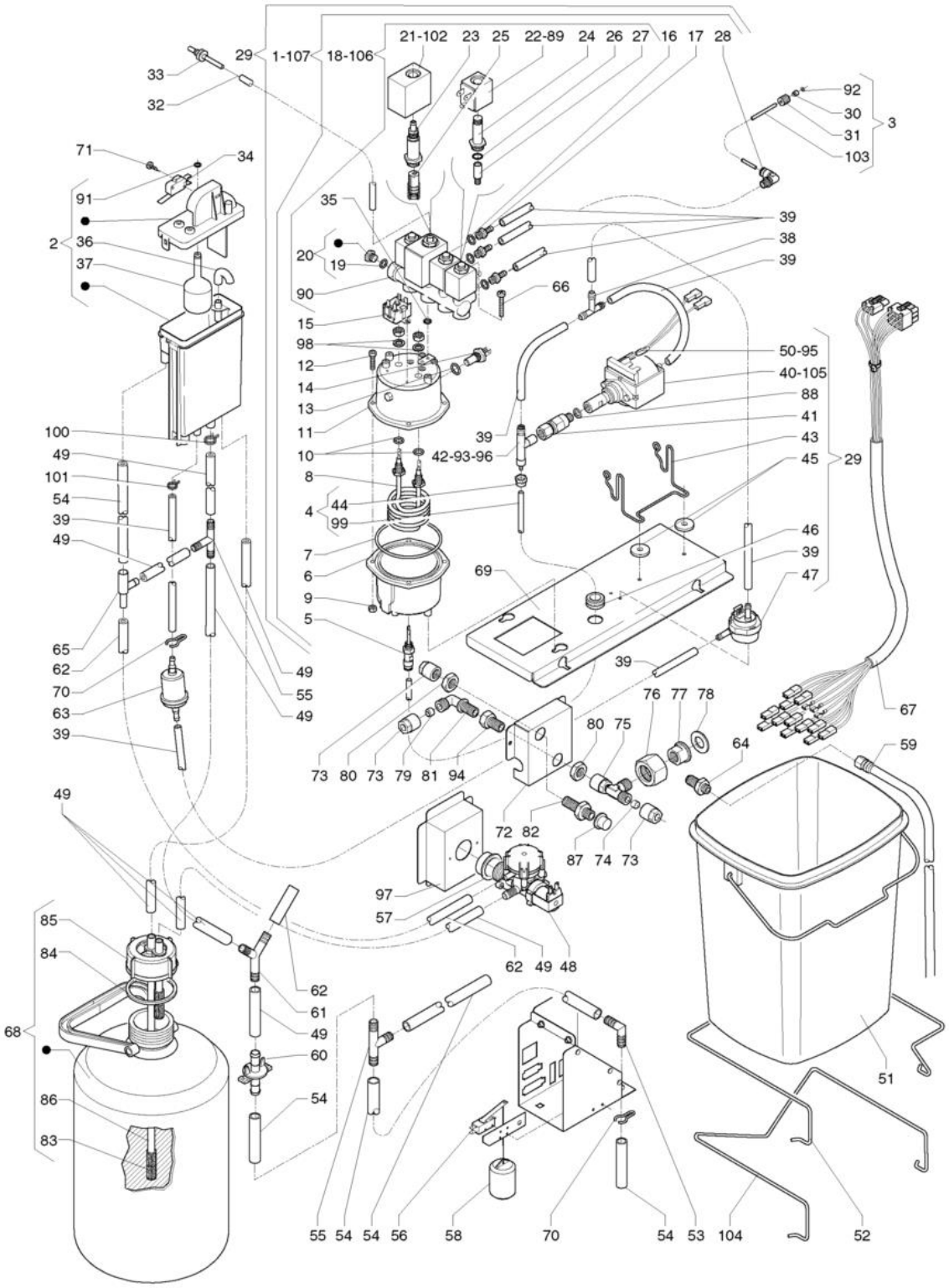
21-102 23 25 22-89 24 26 27 16 17 28
29 1-107 18-106
33
32
92
30
31
103
3
71
34
91
2
36
37
35
39
38
39
20
19
90
66
15
98
12
14
13
11
10
42-93-96
8
4
44
99
7
6
9
5
50-95
40-105
88
41
43
45
29
39
46
39
47
69
100
49
101
54
39
49
65
62
70
63
39
49
55
49
39
73 80 73 79 81 94
76 77 78
80 75
64
59
67
72 82
87 74 73
97
57
62 49 48
85
84
68
86
83
62
61
49
60
54
55 54 54 56 58 70 54 53 104
52
51

posLbl	Item	Description
0001	0V3680	BOILER ASSEMBLY 600 C.C. 230V
0002	0V1133	AIR-BREAK ASSEMBLY
0003	0V3676	PISTON PIPE
0004	0V3677	PUMP/BOILER PIPE
0005	098758	STRAIGHT UNION
0006	0V3651	BOILER LOWER COVER
0007	099748	GASKET -VERS. 600CC-
0008	099653	HEATING ELEMENT 1450 W
0009	255042	NUT M6
0010	254711	GASKET O-RING112 2.62X9.92-HEATING ELEMENT-
0011	0V3650	BOILER UPPER COVER
0012	255041	SCREW M6X25
0013	095624	GASKET O-RING 116 EP851
0014	094872	BOILER TEMPERATURE PROBE-EXCLUSIVE-
0014	259898	NEW TEMPERATURE PROBE
0015	0V1318	125 DEGR. THERMOSTAT
0016	094594	GASKET O-RING 2031
0017	095529	RUBBER HOLDER UNION 1/8' (BRASS)
0018	258747	4 2+2+3+2-WAY 230V 50HZ SOLENOID ASSEMBLY -HIGH PERFORMANCE-
0019	096553	GASKET O-RING 2037
0020	0V1600	CAP WITH O-RING
0021	099057	ELECTROV.-COIL 220/230 VOLT
0022	099056	INSTANTS COIL
0023	099105	COFFEE-ELECTROV. CONNECTION PIPE
0023	298093	COFFEE-ELECTROV. CONNECTION PIPE-HIGH PERFORMANCE-
0024	0V1953	INSTANT-ELECTROV. CONNECTION PIPE
0024	298092	INSTANT-ELECTROV. CONNECTION PIPE-HIGH PERFORMANCE-
0025	097472	3-WAY ELECTROVALVE NUCLEUS -VITON-
0026	099059	VALVE-BUSH-GASKET
0027	099058	NUCLEUS INSTANT-E.V.
0028	0V2509	UNION L-SHAPE 5X1/8
0029	251745	BOILER/COFFEE BRACKET ASSEMBLY-50Hz-KIKKO-
0030	098711	BUSH PISTON PIPE
0031	098699	UNION FOR PISTON PIPE
0032	097529	SILICONE HOSE 3X6 BROWN
0033	099329	FUNNEL NOZZLE D. 3.4
0034	0V1141	MICROSWITCH
0035	252538	O-RING 2025
0036	0V1749	WATER/AIR-BREAK CONNECTION
0037	0V1126	AIR-BREAK FLOAT
0038	094231	UNION T-SHAPE
0039	097510	SILICONE HOSE 5X9 BROWN
0040	098760	PUMP -GLOW WIRE- BRASS-
0040	257112	PUMP 15BAR GLOW WIRE-PLASTIC-

posLbl	Item	Description
0041	099101	NO-RETURN VALVE
0042	098764	BY-PASS PUMP (12 BAR)
0043	098697	PUMP SUPPORT
0044	099107	NUT
0045	093091	PUMP DAMPER
0046	090021	WHIPPING DIAM 10.5 MM
0047	098707	VOLUMETRIC COUNTER D.1,8
0048	097383	ELECTROVALVE WATER-INLET 220V-2,5L/MIN-
0049	097685	SILICONE HOSE BROWN 7,5X12
0050	098815	90 DEGREESTHERMIC PROTECTION
0051	254569	BLUE GROUND BUCKET
0052	0V3653	LIQUID CONTAINER STOP
0053	094571	UNION 90 DEGREES
0054	097515	SILICONE HOSE 10X16 BROWN
0055	096552	UNION T-SHAPE
0056	252585	MICROSWITCH
0057	099815	STOPPER
0058	094294	FLOAT
0059	097378	CONNECTION PIPE
0060	250352	UNION
0061	093959	UNION Y-SHAPE DIAM 12 OUTER
0062	097512	SILICONE HOSE 6X12 BROWN
0063	097435	WATER FILTER VOLUMETRIC COUNTER
0064	097441	WATER INLET INTERMEDIATE HYP.-2
0065	094185	CODENSE RECOVERY UNION
0066	255045	SCREW M4X25
0067	0V3668	COFFEE BRACKET WIRING
0068	094124	DEPURATOR COMPLETE
0069	250367	BOILER BRACKET
0070	093957	TUBE CLAMP
0071	255034	PLAIN TIP SELF-TAPPING SCREW 4X12
0072	0V4252	CONNECTIONS SUPPORT
0073	092387	TIGHTENING NUT
0074	096656	PLUG COLLAR
0075	095586	BANJO UNION T-SHAPE
0076	093951	TIGHTENING NUT G 3/4
0077	093952	WATER INLET CONNECTION NIPPLE
0078	092364	INLET UNION GASKET 3/4
0079	092388	TIGHTENING RING
0080	092652	LOCK NUT 1/4 REV
0081	092651	INTERMEDIATE ELBOW LINK
0082	0V2199	UNION 1/4
0083	091993	DEPURATOR FILTER
0084	092942	DEPURATOR COVERING GASKET

posLbl	Item	Description
0085	094126	DEPURATOR LID
0086	094127	WATER OUTLET PIPE
0087	099805	STOPPER
0088	0V0782	O-RING 2025
0088	251143	ALUMINIUM WASHER
0089	0V0918	2 WAY ELECTROVALVE 60 HZ COIL
0090	253280	MONOBLOC BRASS 4 ELECTROVALVES
0091	090421	GASKET OR 2025
0092	094611	GASKET O-RING 2018
0093	0V0493	BY-PASS PUMP -4 BAR-
0094	0V1400	STRAIGHT CONNECTOR
0095	0V1301	110 DEGREES THERMAL OVERLOAD
0096	099528	BY-PASS PUMP (2 BAR)
0097	255446	WATER INLET ELECTROVALVE SUPPORT
0098	254710	ELASTIC BENT WASHER
0099	252658	TEFLON PIPE 3X6 (A METER)
0100	095515	HOSE CLIP DIAM 14
0101	097002	HOSE CLIP
0102	0V0917	3 WAY ELECTROVALVE 60 HZ COIL
0103	252659	TEFLON PIPE 2.5X5 (A METER)
0104	095730	BUCKET FASTENER
0105	0V0465	PUMP 220V - 60 HZ
0106	258747	4 2+2+3+2-WAY 230V 50HZ SOLENOID ASSEMBLY -HIGH PERFORMANCE-

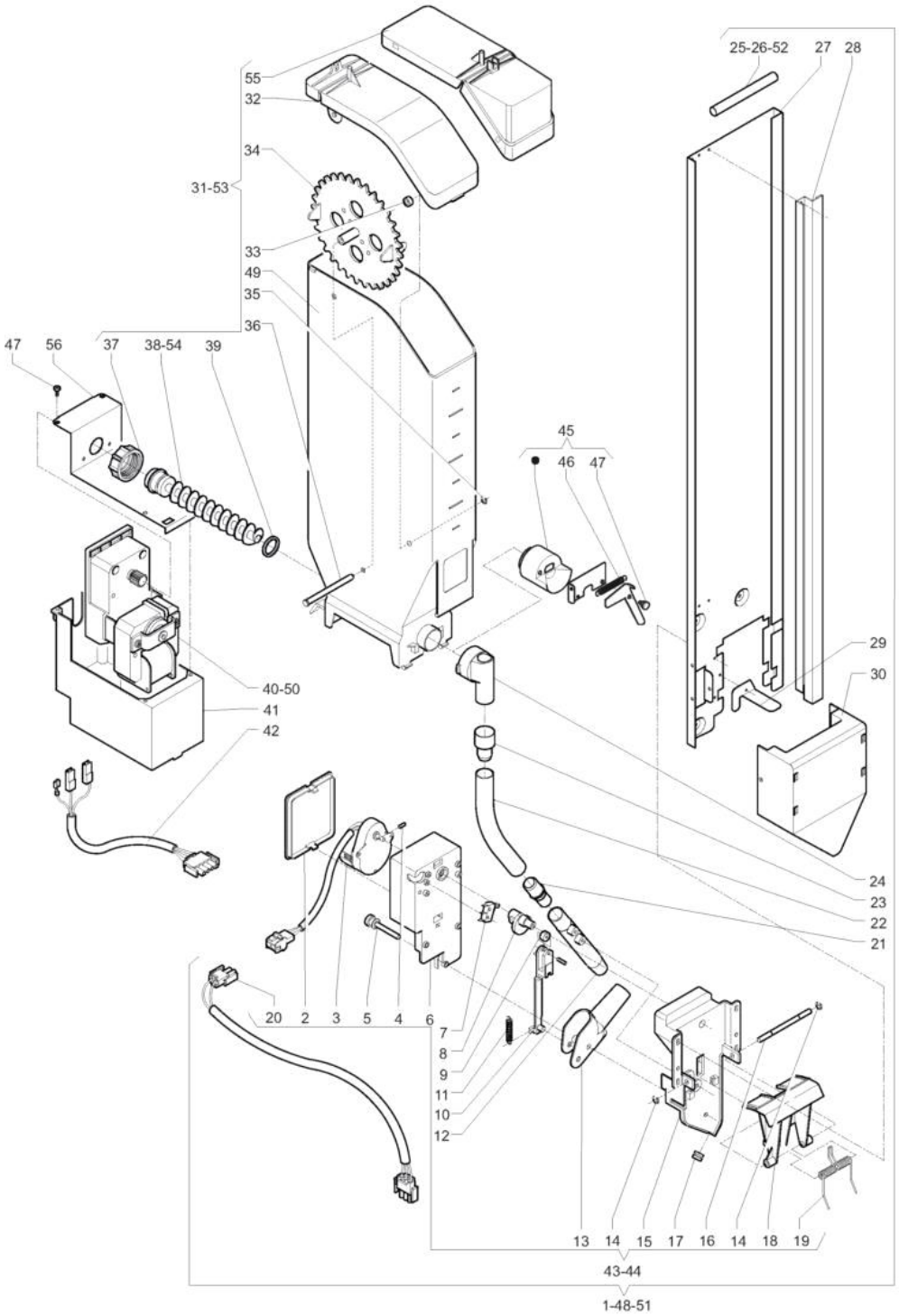
55
32
34
31-53
33
49
35
36
47
56
37
38-54
39
45
46
47
25-26-52
27
28
29
30
40-50
41
42
24
23
22
21
20
2
3
5
4
6
7
8
9
11
10
12
13
14
15
17
16
14
18
19
43-44
1-48-51

posLbl	Item	Description
0001	252012	SUGAR-STIRRER DISPENSER
0002	099609	COVER
0003	099397	MOTOR REDUCTOR 6G/1 MIN.
0004	096904	ELASTIC PLUG 1,5X8
0005	0V2949	SUGAR SPOUT PIN
0006	099608	SUPPORT
0007	096355	MICRO SWITCH -UL -
0008	099606	CAM
0009	099604	ROLLER
0010	099605	ROD
0011	099616	SPRING
0012	098356	SUGAR PIPE
0013	099721	SUGAR NOZZLE
0014	091959	BENZING COLLAR DIAM 4MM
0015	099607	BODY
0016	098352	STIRRING BARS EJECTING PIN
0017	098853	PASS-WIRE
0018	099610	LEVER
0019	099602	SPRING
0020	0V3666	STIRRER DISPENSER WIRING
0021	099375	HOSE COUPLING
0022	098719	PVC PIPE 14X19(A METER)
0023	0V3657	PIPE COUPLING
0024	098939	ROUND STRAIGHT PIPETTE
0025	099720	STIRRER BAR WEIGHT L=105
0026	090203	STIRRER BAR WEIGHT L=95
0027	251977	STIRRER CLOUMN
0028	251982	STIRRER ROD
0029	0V3830	STIRRING GUIDE SQUARE
0030	0V3022	STIRRER CHUTE
0031	253332	SUGAR CONTAINER ASSEMBLY
0032	0V2048	POWDER CONTAINER LID
0033	098812	SPACER
0034	095936	WHEEL
0035	091959	BENZING COLLAR DIAM 4MM
0036	0V1962	PIN FOR WHEEL
0037	095849	CONTAINER RING NUT
0038	098609	SCROLL L=11.7CM
0039	095829	GASKET O-RING
0040	0V3673	SUGAR RATIOMOTOR 52 RPM
0041	0V3710	CONTAINER BASE BRACKET
0042	0V3667	SUGAR DOSING UNIT WIRING
0043	0V3857	STIRRER DISPENSER
0044	0V3663	SUGAR/STIRRER DISPENSER

posLbl	Item	Description
0045	0V4274	SUGAR CONVEYOR ASSY.
0046	093978	SPRING FOR ACTUATOR
0047	255034	PLAIN TIP SELF-TAPPING SCREW 4X12
0048	252019	STIRRER DISPENSER
0049	253262	CONTAINER CASING
0050	250868	SUGAR RATIOMOTOR 78 RPM
0051	252904	115 SUGAR/STIRRER DISPENSER
0052	252034	115 MM STIRRER BAR WEIGHT
0053	0V2174	LONG AUGER CONTAINER
0054	098608	SCROLL L=13.7CM
0055	253333	SUGAR CONTAINER COVER
0056	256162	CONTAINER SUPPORT SHELF

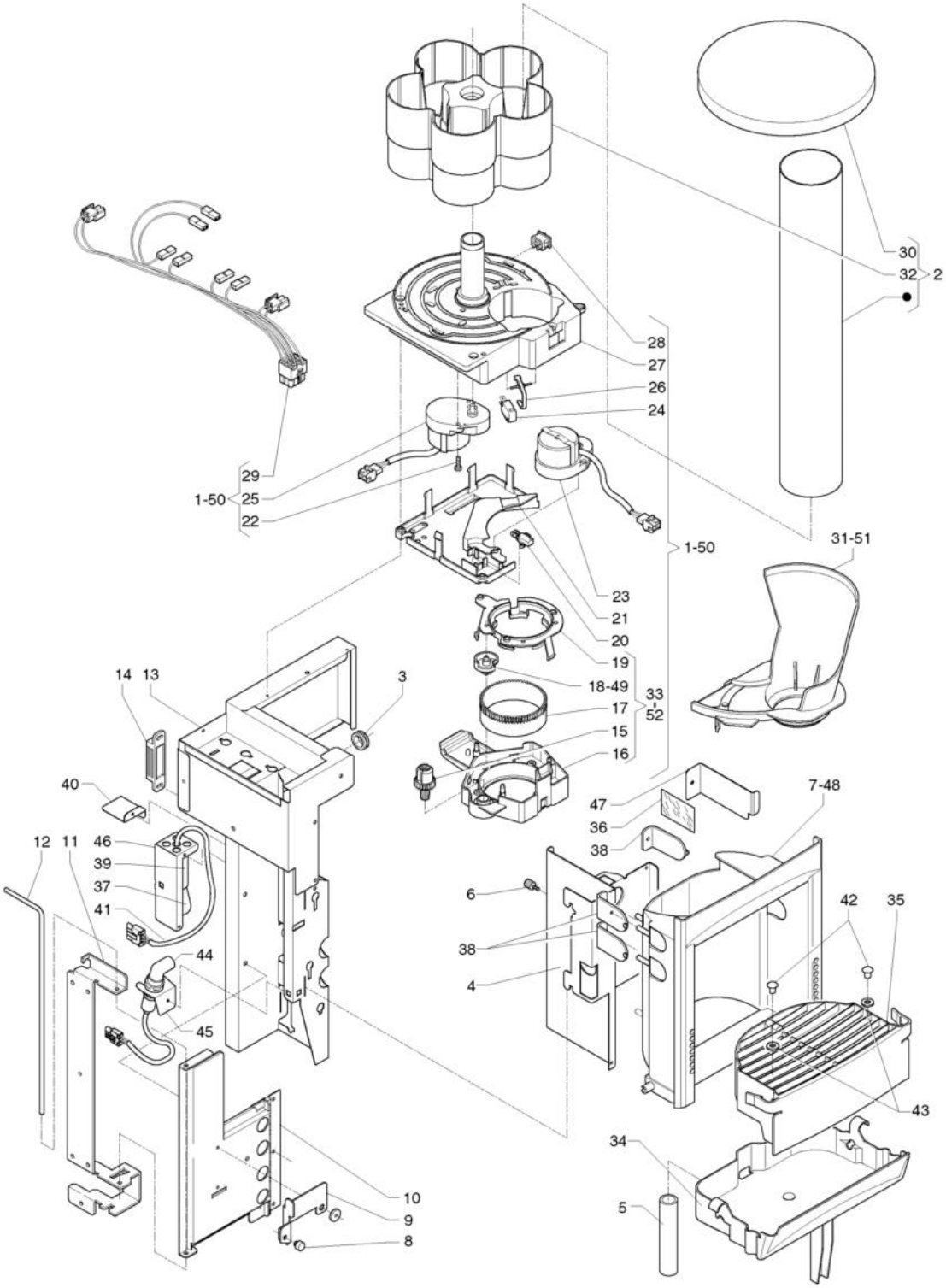
30
32
2
28
27
26
24
29
1-50
25
22
1-50
31-51
23
21
20
19
18-49
33
52
17
15
16
14
13
3
40
12
11
46
39
37
41
44
45
10
9
8
47
36
38
7-48
6
38
4
42
35
43
34
5

posLbl	Item	Description
0001	0V3678	CUP DISPENSER 70/71
0002	252011	CUPS-CONTAINER
0003	093916	WHIPPING OVAL
0004	251277	DISPENSING COMPARTMENT BACK SUPPORT
0005	093628	HOSE VIPLA TRANSPARENT DIAM MM 14X1
0006	096977	KNURL
0007	250246	BLACK DISP.OPENING BACK PANEL
0008	092738	WEDGE BUMPER
0009	0V3649	BRACKET LOCK-OUT LEVER
0010	0V3685	DOUBLE HINGE
0011	0V3641	HINGE SUPPORT
0012	0V3654	FULCRUM PIN
0013	0V3684	CUP STATION BRACKET
0014	097508	LOCKING MAGNET
0015	0V3697	MICRO GEAR
0016	0V3695	SNAIL SUPPORT
0017	098477	TOOTHED RING
0018	098305	SCROLL DIAM.70/71
0019	0V3696	SNAIL RING
0020	0V1931	MICROSWITCH 'UL'
0021	0V3694	MOTOR GEARMOTOR SUPPORT
0022	987628	EJOT-PT-SCREW 3X8
0023	255251	REDUCING GEAR 3RPM 230V-50HZ
0024	092439	MICRO TYPE 'CHERRY'
0025	0V3672	RATIOMOTOR
0026	0V2548	LEVER FOR MICROSWITCH
0027	0V3693	CUP BASE
0028	097807	BUTTON
0029	0V3665	CUP DISPENSER WIRING
0030	0V3658	CUP CONTAINER COVER
0031	250195	BLACK CUP CHUTE 70/71
0032	0V4107	CONTAINER BASE
0033	0V4187	CUP RELEASING 70/71
0034	250347	DISPENSING COMPARTMENT TRAY -BLACK-
0035	250354	BLACK DISPENSING OPENING GRID
0036	0V0906	CATADIOPTRIC PLATE
0037	0V2236	FILAMENT LAMP T26/57 CL 25W
0038	0V3717	GLASS
0039	0V2237	LAMP-HOLDER
0040	0V4253	PROTECTION SQUARE
0041	0V4269	LAMP WIRE
0042	099184	CUP POSITIONING PIN
0043	096863	PIVOT WASHER
0044	0V2149	PHOTOCELL

posLbl	Item	Description
0045	0V4175	PHOTOCELL SUPPORT
0046	0V4251	LAMP SUPPORT
0047	0V4176	CATADIOPTRIC SUPPORT
0048	0V4265	BLACK DISP.OPENING BACK PANEL+HOLES
0049	0V1659	SNAIL W/DIAM. 73-74
0050	0V4271	CUP DISPENSER 73/74
0051	0V4266	BLACK CUP CHUTE 73/74
0052	0V4190	CUP RELEASING 73/74

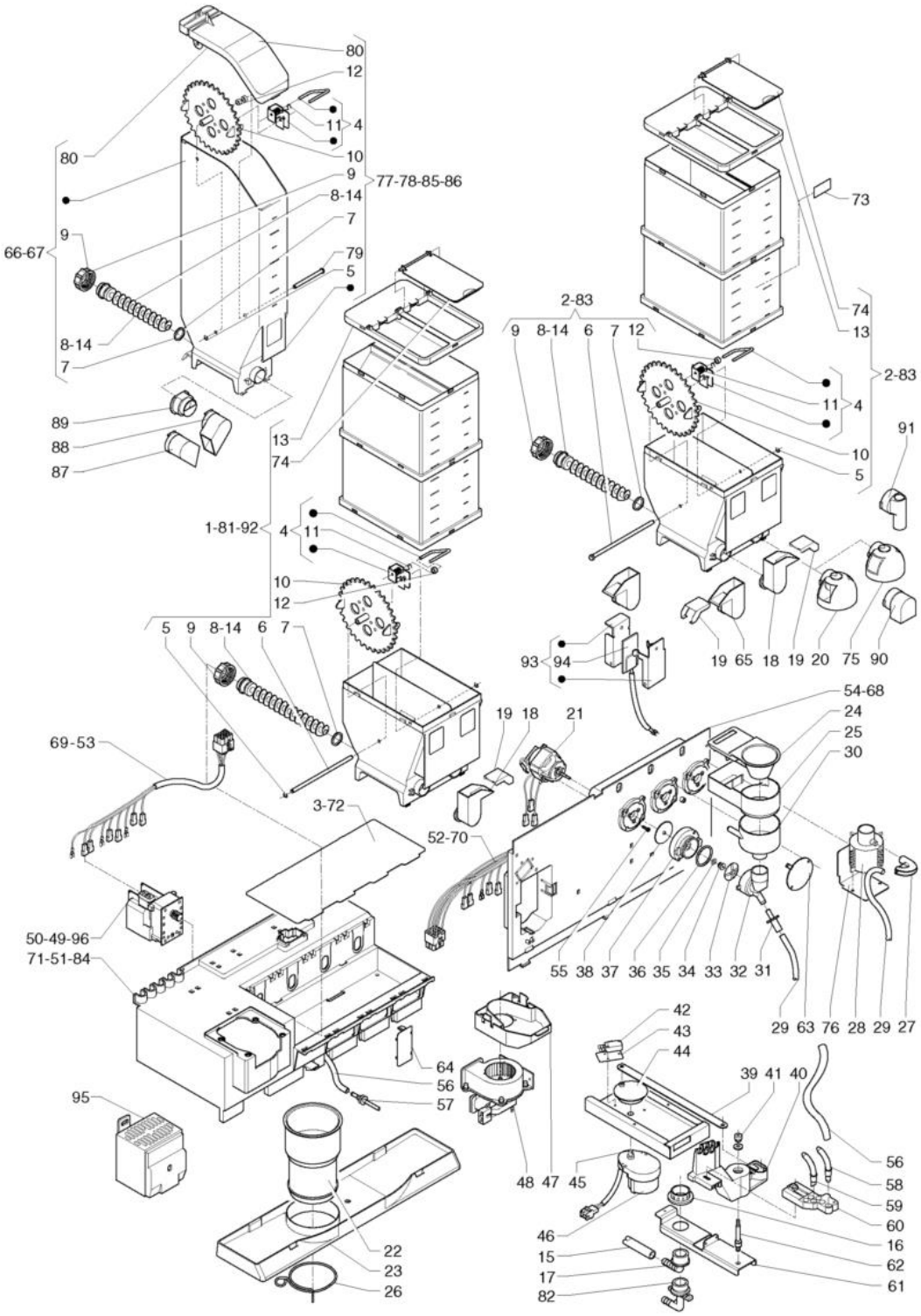
80
12
11
4
10
9
77-78-85-86
8-14
7
79
5
80
9
66-67
8-14
7
89
88
87
13
74
1-81-92
4
11
10
12
5
9
8-14
6
7
69-53
3-72
52-70
50-49-96
71-51-84
95
64
56
57
22
23
26
48
47
45
46
15
17
82
42
43
44
39
41
40
56
58
59
60
16
62
61
55
38
37
36
35
34
33
32
31
29
63
76
28
29
27
54-68
24
25
30
19
18
21
93
94
19
65
18
19
20
75
90
2-83
9
8-14
6
7
12
73
74
13
2-83
11
4
10
5
91

posLbl	Item	Description
0001	0V3683	RIGHT LONG AUGER CONTAINER+BEATER
0002	0V3682	LEFT NORMAL AUGER CONTAINER+BEATER
0003	0V3638	INTAKE OPENING COVER
0004	099494	CANISTER-BEATER
0005	091959	BENZING COLLAR DIAM 4MM
0006	0V3728	WHEEL PIN
0007	095829	GASKET O-RING
0008	098608	SCROLL L=13.7CM
0009	095849	CONTAINER RING NUT
0010	095936	WHEEL
0011	099442	SPRING
0012	098812	SPACER
0013	0V3722	CONTAINER EXTENSION COVER
0014	098609	SCROLL L=11.7CM
0015	097515	SILICONE HOSE 10X16 BROWN
0016	099643	COLLAR
0017	0V2066	3/4 ANGLED RUBBER HOLDER
0018	0V2070	RH POWDER FEEDER
0019	0V2076	SHORT CONVEYOR COVER
0020	0V1536	ROUND SPHERICAL CONTAINER OPENING
0021	098808	MOTORMIXER
0022	0V3698	USED DOSE DISCHARGE PIPE
0023	0V3689	MIXER TRAY
0024	0V1534	DRAWER COVER
0025	0V1537	SUCTION DRAWER
0026	094048	BAG LOCK COLLAR
0027	251295	COIL UNION FOR TEA
0028	097923	COIL FOR TEA
0029	097511	SILICONE HOSE 6X9BROWN
0030	0V1535	WATER FUNNEL
0031	097914	COFFEE CHOKE
0032	0V2519	CONVEYOR FOR MIXER
0033	097916	MIXER VENTILATOR
0034	097917	BUSH SEAL -EXCLUSIVE-
0035	099880	GASKET
0036	094540	GASKET O-RING 3125 -MIXER-
0037	097911	FLANGE FOR MIXER
0038	099889	DISK
0039	0V3643	CONTROL CON-ROD
0040	0V3699	NOZZLE SHIFT ARM
0041	093828	KNURL
0042	0V1930	MICROSWITCH 'UL'
0043	090681	INSULATING DISK.
0044	251519	CRANK

posLbl	Item	Description
0045	096904	ELASTIC PLUG 1,5X8
0046	099617	MOTOREDUCER 12G/1 MIN.
0047	0V3700	FAN SUPPORT
0048	098583	ELECTROVENTILATOR -230V 50HZ-
0049	0V3725	RATIOMOTOR 52 RPM
0050	0V3726	RATIOMOTOR 78 RPM
0051	0V3711	RATIOMOTOR SUPPORT
0052	0V3669	MIXER BRACKET WIRING
0053	0V3840	DOSERS BRACKET WIRING
0054	0V3712	MIXER BRACKET
0055	255046	SCREW M3,5X8
0056	097510	SILICONE HOSE 5X9 BROWN
0057	099329	FUNNEL NOZZLE D. 3.4
0058	097922	NOZZLE
0059	097953	POINTED NOZZLE
0060	098067	SUPPORT FOR INSTANT NOZZLES
0061	0V3642	ARM SUPPORT
0062	0V3655	ARM ROTATION PIN
0063	0V3716	MIXER PLUG
0064	0V3724	BRACKET COVER
0065	0V2072	LH POWDER FEEDER L=38
0066	0V2925	STANDARD AUGER CONTAINER WITHOUT WHEEL
0067	250775	LONG AUGER CONTAINER WITHOUT WHEEL
0068	0V3721	INSTANT MIXER BRACKET
0069	0V3853	DOSERS BRACKET WIRING- INSTANT
0070	0V3854	MIXER BRACKET WIRING- INSTANT
0071	0V3720	INSTANT GEARMOTOR SUPPORT
0072	0V3858	INTAKE OPENING COVER- INSTANT
0073	097502	NAMEPLATE GROUP CONTAINER INSTANT P
0074	0V3723	COVER
0075	0V3719	SQUARE SPHERICAL OPENING
0076	251222	COIL SUPPORT FOR TEA
0077	0V2173	NORMAL AUGER CONTAINER
0078	0V2174	LONG AUGER CONTAINER
0079	0V1962	PIN FOR WHEEL
0080	0V2048	POWDER CONTAINER LID
0081	250183	RH CONTAINER FOR NORMAL AUGER + BEATER
0082	253277	ANGLED RUBBER HOLDER
0083	0V3856	LEFT LONG AUGER CONTAINER+BEATER
0084	250788	GEARMOTOR SUPPORT-TEA VERSION-
0085	0V2177	NORMAL AUGER CONTAINER+BEATER
0086	0V2175	LONG AUGER CONTAINER+BEATER
0087	250785	RIGHT THE CONVEYOR
0088	250786	LEFT THE CONVEYOR

posLbl	Item	Description
0089	250787	THE CONVEYOR EXTENSION
0090	096868	SQUARE STRAIGHT PIPETTE
0091	098939	ROUND STRAIGHT PIPETTE
0092	0V3855	RIGHT LONG AUGER CONTAINER+BEATER
0093	252646	CONVEYOR HEATER ASSY.
0094	252645	24 VOLT 4 WATT RESISTANCE
0095	253850	MIXER HEATER
0096	250004	RATIOMOTOR 138 RPM

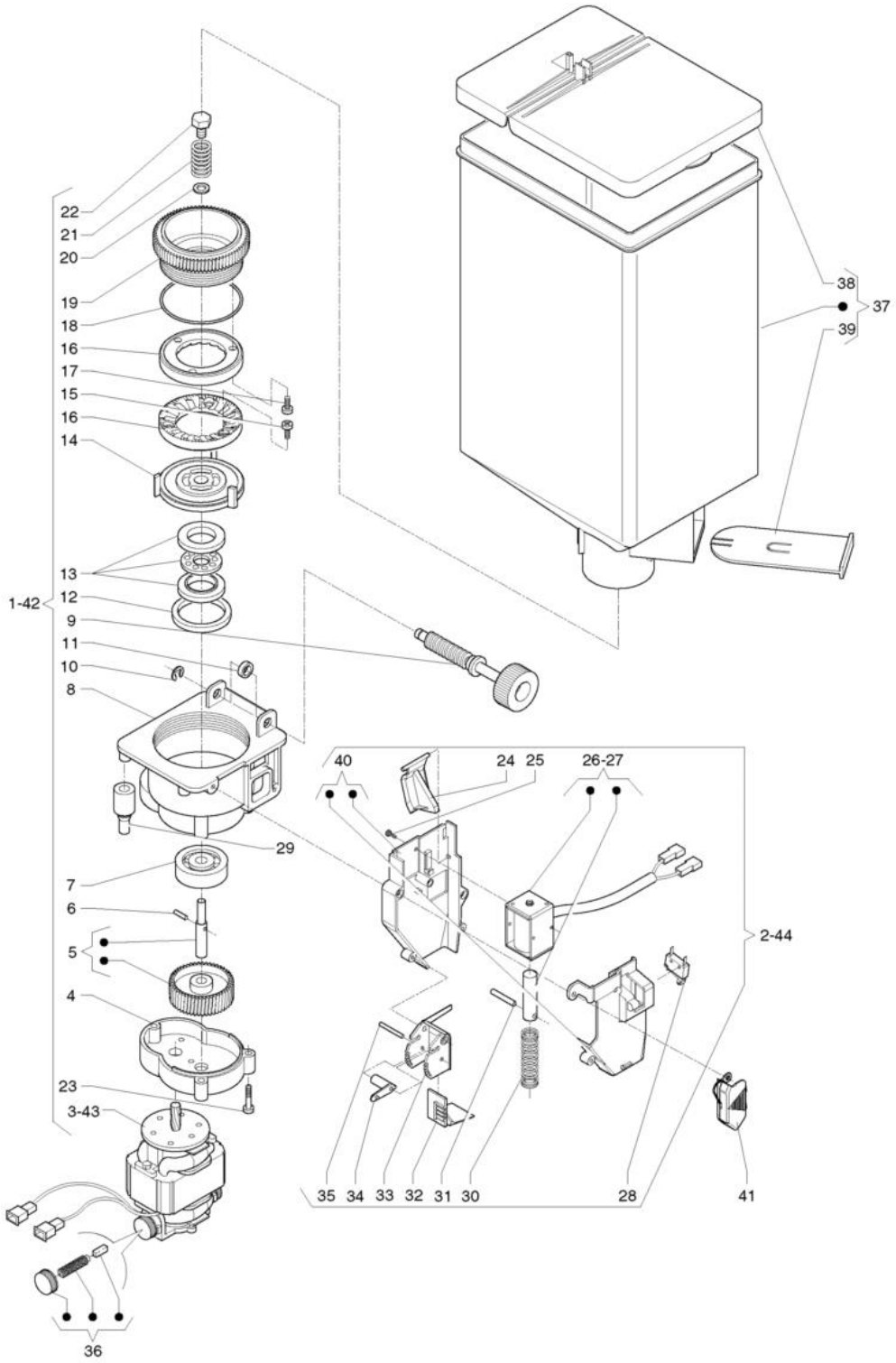
22
21
20
19
18
16
17
15
16
14
13
12
9
11
10
8
1-42
29
7
6
5
4
23
3-43
36
38
37
39
40
24 25
26-27
2-44
35 34 33 32 31 30
28
41

posLbl	Item	Description
0001	099336	GRINDER
0002	099337	COFFEE DOSER
0003	099732	GRINDER MOTOR
0004	099468	SUPPORT
0005	099470	SHAFT WHEEL
0006	098293	ELASTIC PLUG
0007	095803	RADIAL BEARING
0008	099469	CAP
0009	099474	REGULATION SCREW
0010	093171	OUTER FIXING COLLAR DIAM MM6
0011	099457	WASHER
0012	093271	COFFEE JUNK RING .
0013	093187	THRUST BEARING
0014	095802	GRINDER HOLDER IMPELLER
0015	255032	TREFOIL SCREW M4X10
0016	095840	GRINDER
0017	255033	SELF-TAPPING SCREW 4X10
0018	095805	GASKET O-RING
0019	099473	GRINDER HOLDER
0020	096988	WASHER
0021	099471	SPRING
0022	099472	LEFT SCREW
0023	255031	SELF-TAPPING SCREW 4,2X26
0024	099475	ACTUATOR
0025	092657	CLOSS SLOT SCREW 3X6TC .
0026	098716	ELECTROMAGNET 220V -FASTON-
0027	098716	ELECTROMAGNET 220V -FASTON-
0028	0V2131	BURGESS MICRO-SWITCH -FASTON-
0029	099484	LITTLE RUBBER
0030	098696	SPRING DOSER ELECTROMAGNET
0031	093832	ROD PIVOT
0032	098643	RULE COFFEE-DOSES
0033	098642	SHUTTER COFFEE-DOSER
0034	098644	LEVER FOR RULE
0035	098822	PIN FOR LEVER
0036	0V3229	MOTORBRUSH KIT
0037	0V3681	COFFEE CONTAINER
0038	0V0421	COVER
0039	098630	ROLL-UP FOR CONTAINER
0040	251128	COFFEE DOSER-BODY
0041	254834	SIDE BATCHER LID
0042	0V0448	GRINDER 60 HZ
0043	0V0451	GRINDER MOTOR 60 HZ
0044	099337	COFFEE DOSER

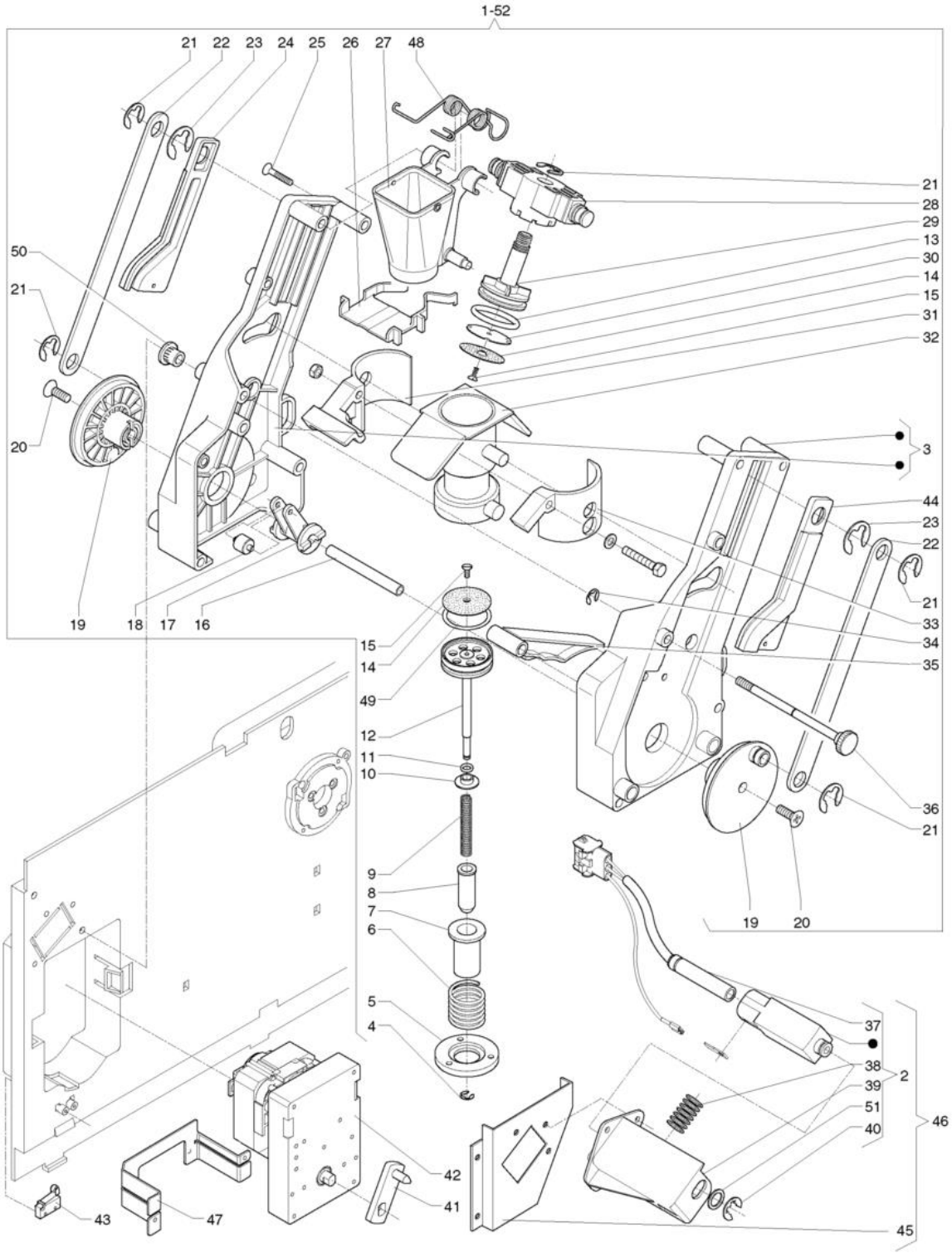
1-52
21 22 23 24 25 26 27 48
21
28
29
13
30
14
15
31
32
50
21
20
3
44
23
22
21
33
34
35
19 18 17 16
15
14
49
12
11
10
36
21
9
8
7
6
19 20
5
4
37
38
39
51
40
2
46
42
41
43 47
45

posLbl	Item	Description
0001	252506	Z3000 WITH HEATER(OPEN DURING STAND-BY POSITION)
0002	0V1783	HEATER WITH SUPPORT
0003	251101	RH-LH SUPPORT
0004	098818	STOPPING RING D.4
0005	098569	FLANGE FOR SPRING
0006	098689	PREINFUSION SPRING
0007	098567	LID FOR SPRING
0008	098691	LOWER PISTON GUIDE
0009	098688	PISTON RETURN SPRING
0010	098690	CONTROL BUSH
0011	090421	GASKET OR 2025
0012	099490	LOWER PISTON
0013	093167	SILICONE GASKET OR4118
0014	098687	COFFEE FILTER
0015	255047	SCREW M3X10 -INOX-
0016	098693	ROD CRANK BLOCKING
0017	098574	ROTATING LEVER
0018	098692	ROTATING LEVER ROLL
0019	098573	CRANK
0020	0V3889	SCREW M6X14
0021	092717	FIXING COLLAR DIAM MM10
0022	098565	TRACE FOR PISTON COMMAND
0023	096569	FIXING COLLAR DIAM 12
0024	098571	REAR SLEDGE
0025	255031	SELF-TAPPING SCREW 4,2X26
0026	251740	COFFEE SCRAPER
0027	251739	Z3000 COFFEE CHUTE
0028	098568	CROSS-BAR
0029	098577	UPPER PISTON
0030	0V1789	WATER DEFLECTOR
0031	0V1785	REAR PANEL
0032	0V1715	BREWING CHAMBER W/PLUG
0033	0V1784	FRONT PANEL
0034	091287	OUTER FIXING COLLAR
0035	098575	OSCILLATING LEVER
0036	252020	TIEROD WITH KNURLED NUT
0037	0V1786	25 WATT 110/265 V RESISTOR
0038	0V1788	CONTACT SPRING
0039	0V1787	SUPPORT
0040	987948	LOCKING WASHER
0041	098763	CRANK WITH PIN
0042	098708	MOTOREDUCER
0043	096355	MICRO SWITCH -UL -
0044	098572	FRONT SLEDGE

posLbl	Item	Description
0045	251487	HEATER SUPPORT
0046	251928	HEATER SUPPORT
0047	252871	MOTOREDUCER SUPPORT
0048	252277	SCRAPER SPRING
0049	253411	GASKET O-RING 4112-LOWER PISTON-
0050	253655	SPACER BUSH
0051	0V0782	O-RING 2025
0051	251143	ALUMINIUM WASHER
0052	251687	COFFEE-GROUP Z3000

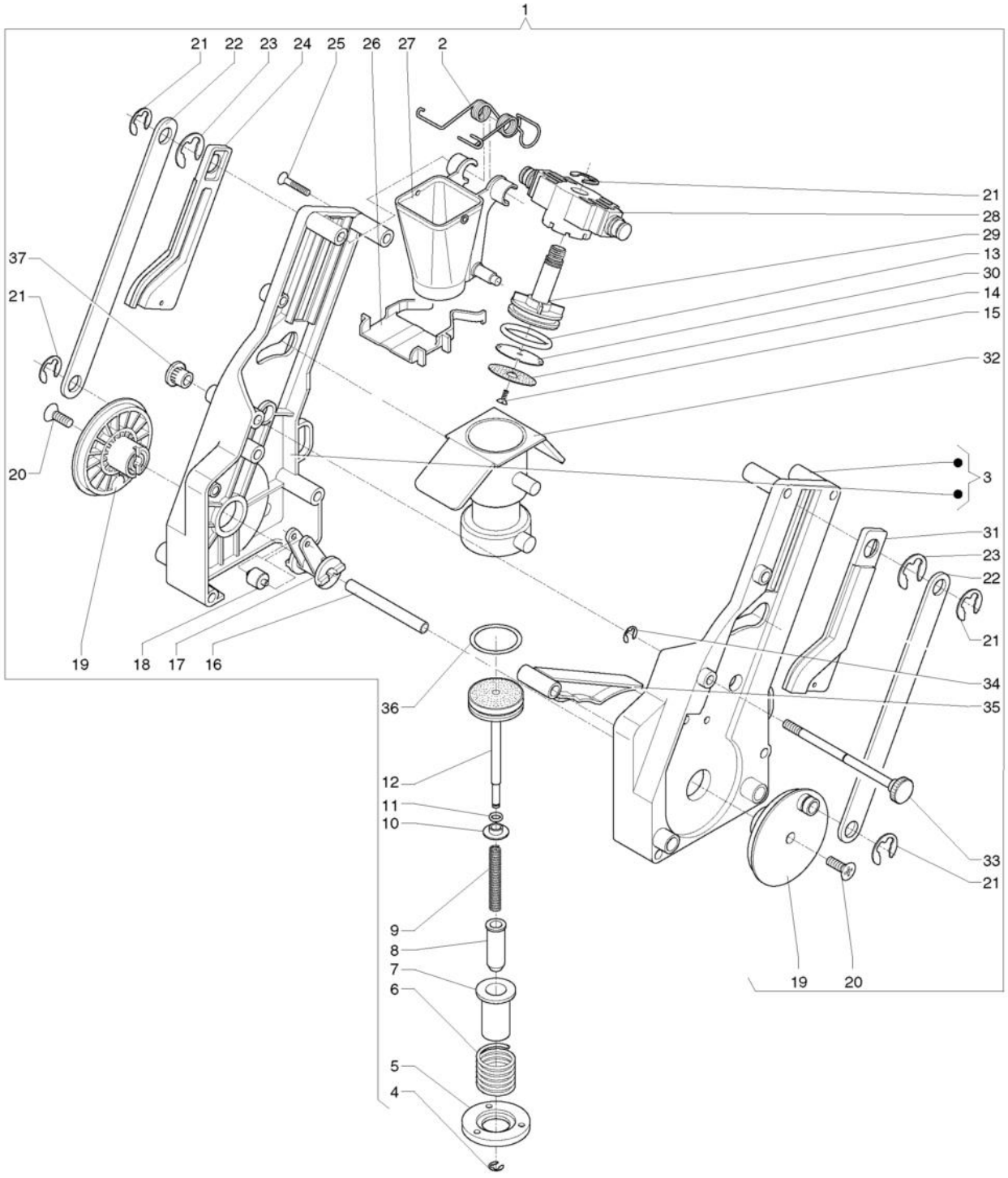
1
21
22
23
24
25
26
27
2
21
28
29
13
30
14
15
32
37
21
20
3
31
23
22
21
19
18
17
16
34
35
36
12
11
10
33
21
9
8
7
6
5
4
19
20

posLbl	Item	Description
0001	253237	Z3000 TEA UNIT
0002	252277	SCRAPER SPRING
0003	251101	RH-LH SUPPORT
0004	098818	STOPPING RING D.4
0005	098569	FLANGE FOR SPRING
0006	098689	PREINFUSION SPRING
0007	098567	LID FOR SPRING
0008	098691	LOWER PISTON GUIDE
0009	098688	PISTON RETURN SPRING
0010	098690	CONTROL BUSH
0011	090421	GASKET OR 2025
0012	250023	LOWER PISTON WITH PIN
0013	093167	SILICONE GASKET OR4118
0014	098687	COFFEE FILTER
0015	255047	SCREW M3X10 -INOX-
0016	098693	ROD CRANK BLOCKING
0017	098574	ROTATING LEVER
0018	098692	ROTATING LEVER ROLL
0019	098573	CRANK
0020	0V3889	SCREW M6X14
0021	092717	FIXING COLLAR DIAM MM10
0022	098565	TRACE FOR PISTON COMMAND
0023	096569	FIXING COLLAR DIAM 12
0024	098571	REAR SLEDGE
0025	255031	SELF-TAPPING SCREW 4,2X26
0026	251740	COFFEE SCRAPER
0027	251739	Z3000 COFFEE CHUTE
0028	098568	CROSS-BAR
0029	098577	UPPER PISTON
0030	0V1789	WATER DEFLECTOR
0031	098572	FRONT SLEDGE
0032	0V1715	BREWING CHAMBER W/PLUG
0033	252020	TIEROD WITH KNURLED NUT
0034	091287	OUTER FIXING COLLAR
0035	098575	OSCILLATING LEVER
0036	253411	GASKET O-RING 4112-LOWER PISTON-
0037	253655	SPACER BUSH

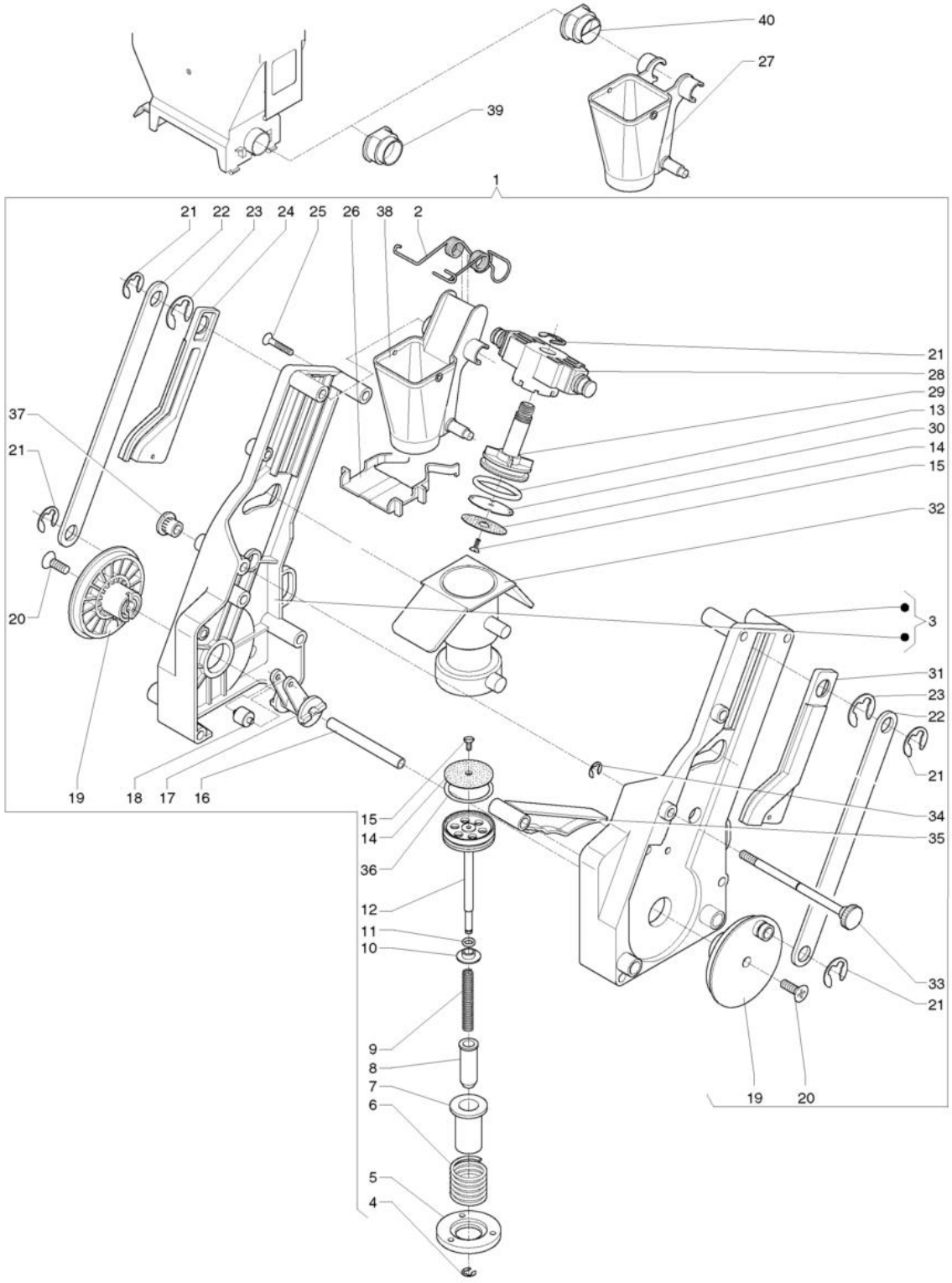
40
27
39
1
21 22 23 24 25 26 38 2
21
28
29
13
30
14
15
32
37
21
20
3
31
23
22
21
19 18 17 16
34
35
15
14
36
12
11
10
33
21
9
8
7
6
5
4
19 20

posLbl	Item	Description
0001	253588	Z3000 TEA UNIT -TURKISH-
0002	252277	SCRAPER SPRING
0003	251101	RH-LH SUPPORT
0004	098818	STOPPING RING D.4
0005	098569	FLANGE FOR SPRING
0006	098689	PREINFUSION SPRING
0007	098567	LID FOR SPRING
0008	098691	LOWER PISTON GUIDE
0009	098688	PISTON RETURN SPRING
0010	098690	CONTROL BUSH
0011	090421	GASKET OR 2025
0012	099490	LOWER PISTON
0013	093167	SILICONE GASKET OR4118
0014	098687	COFFEE FILTER
0015	255047	SCREW M3X10 -INOX-
0016	098693	ROD CRANK BLOCKING
0017	098574	ROTATING LEVER
0018	098692	ROTATING LEVER ROLL
0019	098573	CRANK
0020	0V3889	SCREW M6X14
0021	092717	FIXING COLLAR DIAM MM10
0022	098565	TRACE FOR PISTON COMMAND
0023	096569	FIXING COLLAR DIAM 12
0024	098571	REAR SLEDGE
0025	255031	SELF-TAPPING SCREW 4,2X26
0026	251740	COFFEE SCRAPER
0027	251739	Z3000 COFFEE CHUTE
0028	098568	CROSS-BAR
0029	098577	UPPER PISTON
0030	0V1789	WATER DEFLECTOR
0031	098572	FRONT SLEDGE
0032	0V1715	BREWING CHAMBER W/PLUG
0033	252020	TIEROD WITH KNURLED NUT
0034	091287	OUTER FIXING COLLAR
0035	098575	OSCILLATING LEVER
0036	253411	GASKET O-RING 4112-LOWER PISTON-
0037	253655	SPACER BUSH
0038	252547	DECAF. SLIDE -USA-
0039	253587	THE CONVEYOR EXTENSION
0040	250787	THE CONVEYOR EXTENSION

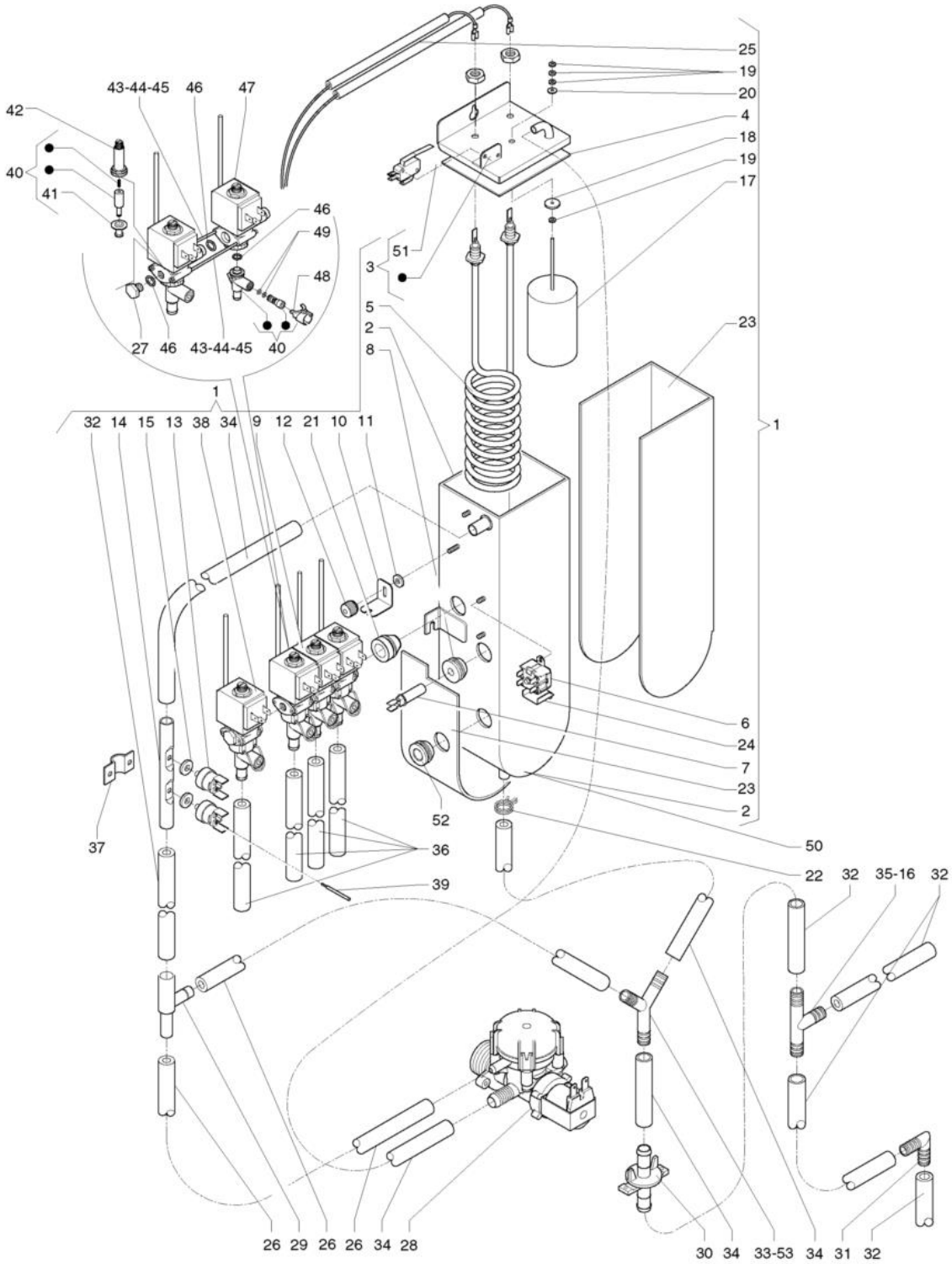
25
19
20
4
18
19
17
23
1
6
24
7
23
2
50
22
32
35-16
32
30
34
33-53
34
31
32
26
29
26
26
34
28
37
36
39
52
51
3
5
2
8
1
32
14
15
13
38
34
9
12
21
10
11
42
40
41
43-44-45
46
47
46
49
48
27
46
43-44-45
40

posLbl	Item	Description
0001	0V3843	INSTANT-BOILER COMPLET
0002	0V3844	BOILER BODY
0003	0V3845	BOILER COVER+MICRO
0004	0V3846	GASKET
0005	0V3847	1660 W - 230V HEATING ELEMENT
0006	0V1364	105 DEGREE SAFETY THERMOSTAT
0007	0V0157	FEELER
0008	099918	GASKET FOR FEELER
0009	0V3849	3 ELECTROVALVES GROUPE
0010	098895	ELECTROVALVE FIXING BRACKET
0011	093179	INSULATING WASHER MOTOREDUCTER
0012	097699	KNURL M4
0013	0V2129	THERMOSTAT 82 C
0014	099458	TUBE FOR 2 THERMOSTAT
0015	094597	COPPER WASHER
0016	096552	UNION T-SHAPE
0017	098260	FLOAT
0018	099510	SEAL
0019	091842	OUTER FIXING COLLAR D.2,3
0020	092796	OUTFLOW REGUL FASTENER
0021	099847	GASKET FOR EV. INSTANT BOILER
0022	093957	TUBE CLAMP
0023	0V3851	BOILER INSULATION
0024	0V3848	THERMOSTAT PROTECTION
0025	0V3852	INSTANT BOILER WIRING
0026	097512	SILICONE HOSE 6X12 BROWN
0027	0V4308	STOPPER WITH O-RING
0028	097383	ELECTROVALVE WATER-INLET 220V-2,5L/MIN-
0029	094185	CODENSE RECOVERY UNION
0030	250352	UNION
0031	094571	UNION 90 DEGREES
0032	097515	SILICONE HOSE 10X16 BROWN
0033	093959	UNION Y-SHAPE DIAM 12 OUTER
0034	097685	SILICONE HOSE BROWN 7,5X12
0035	094231	UNION T-SHAPE
0036	097510	SILICONE HOSE 5X9 BROWN
0037	098484	HOSE FIXING
0038	0V3888	INSTANT PROD. ELECTROVALVE
0039	0V2074	THERMOSTAT ACTUATOR
0040	251632	ELECTROVALVE KIT
0041	252016	EV. MEMBRANE-GASKET
0042	0V3552	VALVE BUSH
0043	0V4309	LOCKING TUBE L=138
0044	0V4309	LOCKING TUBE L=138

posLbl	Item	Description
0045	0V4309	LOCKING TUBE L=138
0046	0V3554	INSTANT EV. GASKET O-RING
0047	099057	ELECTROV.-COIL 220/230 VOLT
0048	0V3556	LOWER BODY STOP
0049	099064	INSTANT EV. ADJUSTING-SCREW-GASKET
0050	253827	BOILER BODY KIKKO, BRIO250 -AISI 316-
0051	252585	MICROSWITCH
0052	099928	STOPPER GASKET
0053	093963	UNION Y-SHAPE DIAM 8 OUTER

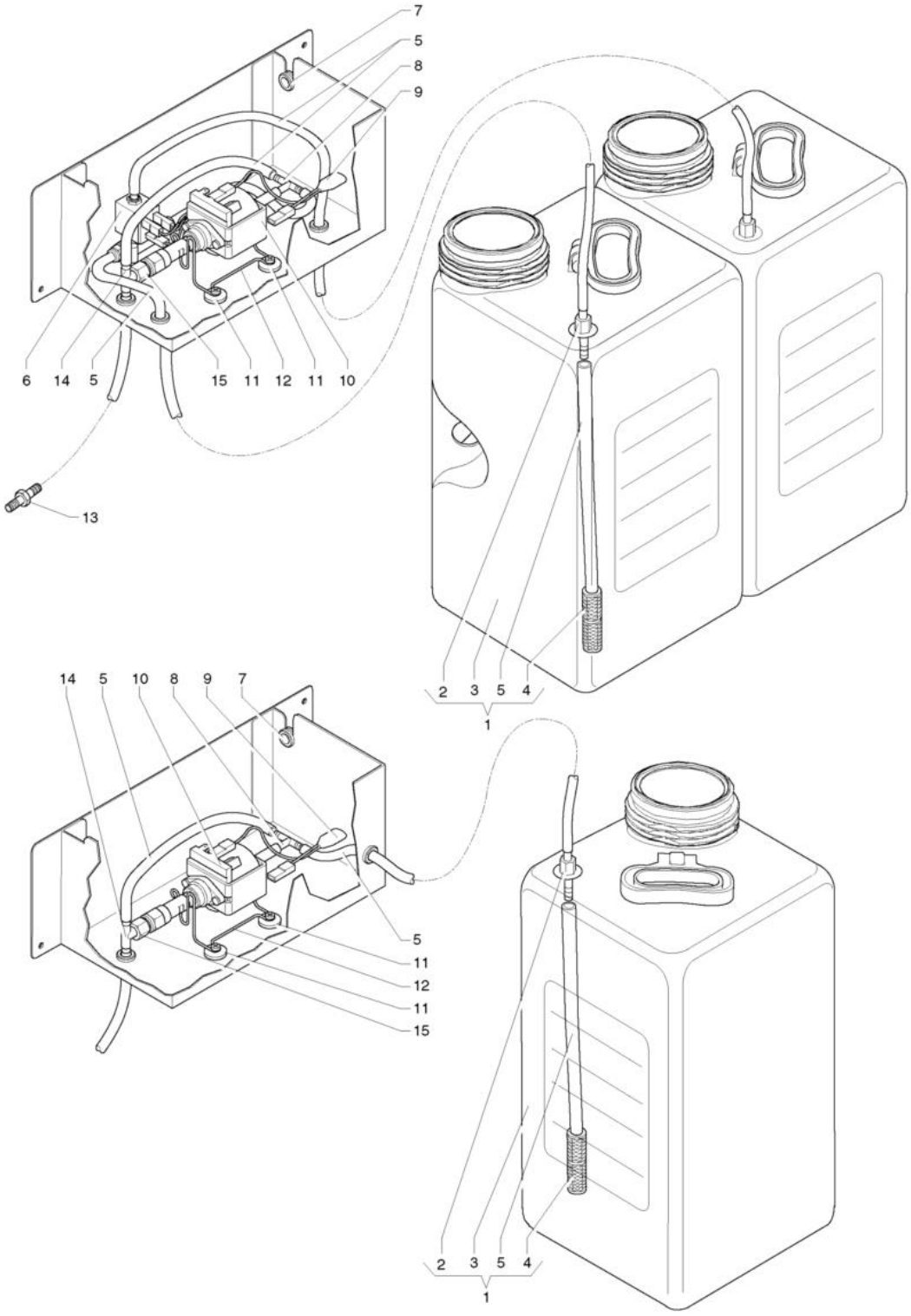
7
5
8
9
6
14
5
15
11
12
11
10
13
2
3
5
4
1
14
5
10
8
9
7
5
11
12
11
15
2
3
5
4
1

posLbl	Item	Description
0001	0V3271	20 LITRE CAN ASSY.
0002	0V3272	UNION
0003	252855	20 LITRE CAN
0004	091536	BOTTOM VALVE
0005	097512	SILICONE HOSE 6X12 BROWN
0006	0V3252	ELECTROVALVE
0007	090021	WHIPPING DIAM 10.5 MM
0008	094231	UNION T-SHAPE
0009	0V1301	110 DEGREES THERMAL OVERLOAD
0010	099893	PUMP 2.5BAR GLOW WIRE-PLASTIC-
0011	093091	PUMP DAMPER
0012	098697	PUMP SUPPORT
0013	094140	RUBBER HOLDER UNION
0014	099528	BY-PASS PUMP (2 BAR)
0015	254841	CONNECTION M-F 1/8 + OR2025

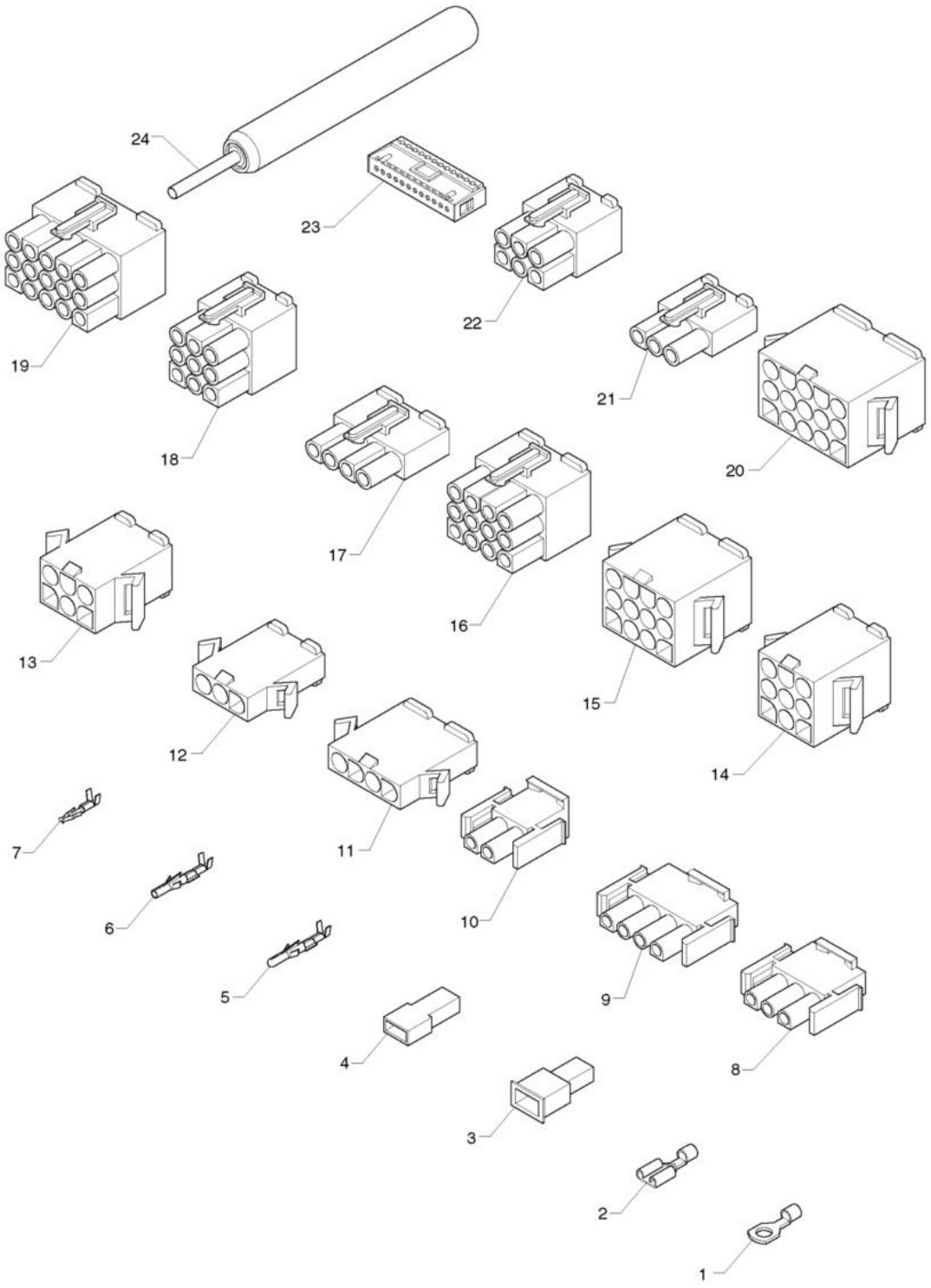
24
23
22
19
18
21
20
17
16
13
15
12
14
11
7
10
6
9
5
8
4
3
2
1

posLbl	Item	Description
0001	090957	EYELET TERMINAL
0002	090959	FASTON W/O TONGUE
0003	091192	FASTON COVER
0004	090247	FEMALE FASTON COVER
0005	095955	TERMINAL MALE
0006	096136	TERMINAL FEMALE
0007	094405	TERMINAL FEMALE 2,5
0008	094954	FEMALE HOLDER CONNECTOR 3-WAYS
0009	098062	4-WAY CONNECTOR MATE-N-LOK AMP
0010	094955	FEMALE HOLDER CONNECTOR 2-WAYS
0011	0V0809	4-PIN CONNECTOR/P MOLEX 3191
0012	0V0808	3-PIN CONNECTOR/P MOLEX 3191
0013	0V0810	6-PIN CONNECTOR/P MOLEX 3191
0014	0V0811	9-PIN CONNECTOR/P MOLEX 3191
0015	0V0812	12-PIN CONNECTOR/P MOLEX 3191 12-
0016	0V0818	PIN CONNECTOR/P MOLEX 3191
0017	0V0815	4-PIN CONNECTOR/P MOLEX 3191
0018	0V0817	9-PIN CONNECTOR/P MOLEX 3191
0019	0V0819	15-PIN CONNECTOR/P MOLEX 3191 15-
0020	0V0813	PIN CONNECTOR/P MOLEX 3191
0021	0V0814	3-PIN CONNECTOR/P MOLEX 3191
0022	0V0816	6-PIN CONNECTOR/P MOLEX 3191
0023	094961	FEMALE HOLDER CONNECTOR P.I. 12-W
0024	0V0820	MOLEX CONTACT PULLER