Model Machine

MACSAE210	**КАВОВИЙ АВТОМАТ PR PHEDRA EVO CAPP. 9GR 1C3 230/50**
MACSAE210.T.0001	**TAVOLA NR. 1 - ARTICOLO КАВОВИЙ АВТОМАТ PR PHEDRA EVO CAPP. 9GR 1C3 230/50**

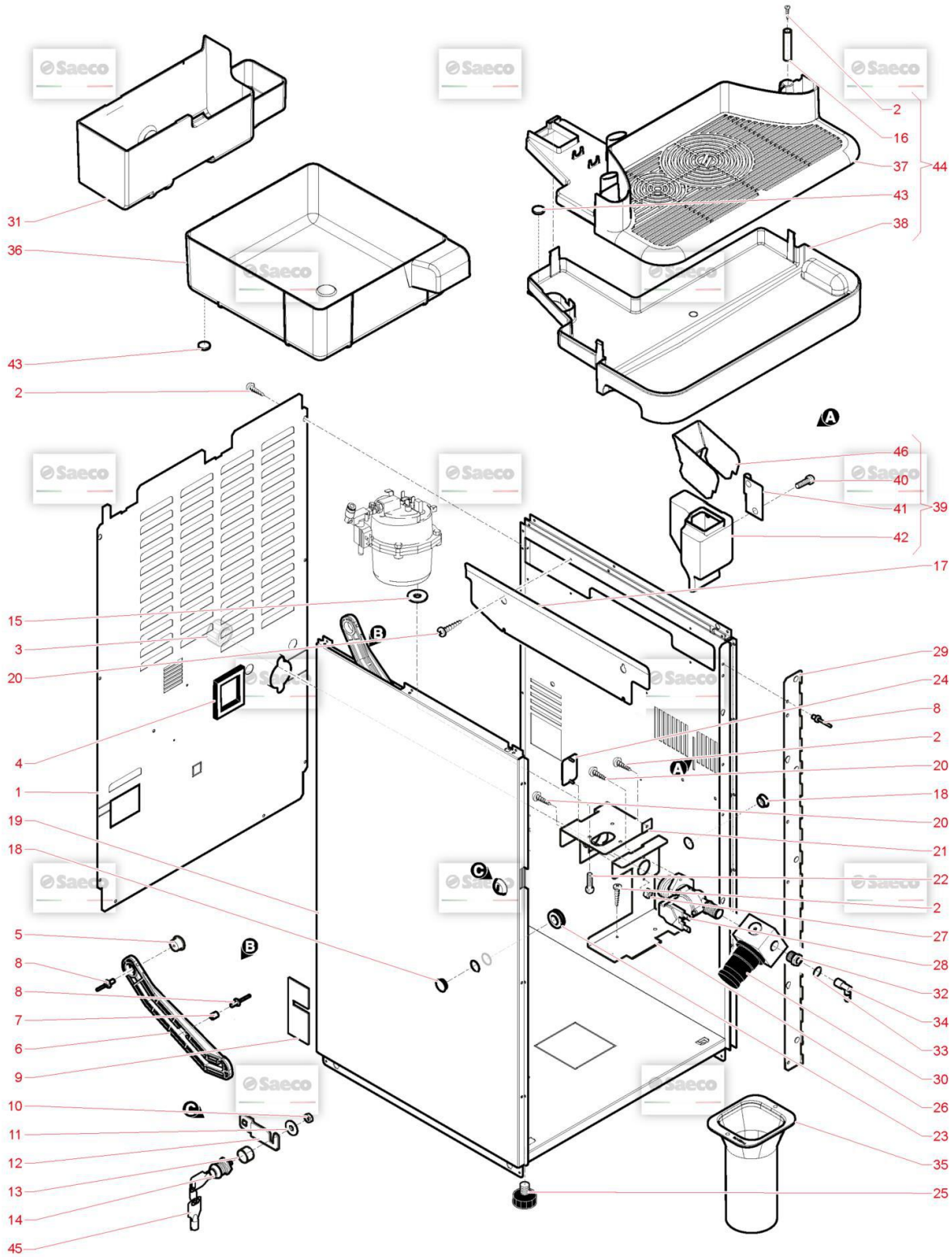

Model Machine

MACSAE210 **КАВОВИЙ АВТОМАТ PR PHEDRA EVO CAPP. 9GR 1C3 230/50**

Web	Pos.	Item	Replace by	Description
		Press - CTRL + CLICK go to item in a new window		
		Нажмите - Ctrl + правая кнопка мыши что бы открыть запчасть в новом окне		
	1	11033288		PHEDRA REAR PANEL
	2	U116.006		SCREW AUT.PT TCB 3,5X12 WN 1441 ZNP
	3	NV03.002		CAP 3/4 "KAPSTO 800R 3/4"
	4	9111.088		ADHESIVE SEAL FOR ASPIRATOR
	5	11033447		BUSH LEVER ROOF
	6	11033773		DOOR STIRRUP UPPER 5P07
	7	11009319		BUSH FOR BRACKET UPPER DOOR
	8	NF11.022		EXPANSION RIVET D=2,8X8 ALU. BLACK
	9	11013519		SPACE FOR PANEL PHEDRA
	10	U302.004		NUT HEXAGONAL M6 UNI 5588
	11	U208.006		TOOTHED WASHER 6,4X11 UNI 3703
	12	1813.105		LEVER FOR LOCK
	13	1813.126		SPACER
	14	NV02.249		LOCK MERONI 3351B21 X DISTRIB.
	15	9111.501		INSULATION WASHER
	16	11033561		STOP EXTRACTION TANK
	17	11033442		CARTER FOR HARNESS PHEDRA EVO
	18	12001971		PLUG BLK F.15,9-SP.MAX 1,6
	19	11035371		FRAME PHEDRA EVO
	20	12002160		SCREW TMTPH2 3,5X9,5 F ZNP ISO4759/1
	21	11033289		PHEDRA BOILERS SUPPORT PLATE
	22	U046.005		SCREW TE M5,0X10 WITH WASHER
	23	NE16.002		GROMMET D.11X20,5XH.7
	24	11034232		CLOSURE PLATE WATER SUPPLY
	25	NV01.015		FOOT D.22 H.18 M6
	26	11033602		PUMP SUPPORT PLATE
	27	U324.006		NUT M4 FLANGED INDENTED BASE
	28	11008834		SOLENOID VALVE
	29	11033431		HINGE FOR DOOR
	30	NV99.007		PRESS. REDUCER .1BAR 1/4 MRABIT 52
	31	11033809		DRAWER TRUST
	32	9181.404		REDUCTION MF 1/4"X1/8" TEA
	33	140321961		O-RING 2031 NFDA NBR 70 FDA
	34	11001054		BLK PUMP OUTLET 90°CONNECTOR P0049/B
	35	11032178		COFFEE CONVEY
	36	11033365		DUMP BOX PHEDRA EVO
	37	11033368		GRILL WATER RECOVER BOX
	37	11034997		GRILL WATER RECOVER BOX CSA BLK
	38	11033367		WATER RECOVER BOX
	38	11034996		WATER RECOVER BOX CSA BLK
	39	11013321		COIN CASE PHEDRA
	39	11033785		COIN CASE PHEDRA EVO
	40	U044.018		SCREW TSPC M5,0X8 UNI 7688 GALV.
	41	11012740		PLATE FOR COIN BOX PHEDRA
	42	11011322		COIN CASE 5P07
	43	9991.189		MAGNET D.9,5X2 2000 GAUSS

LIBERTY UKRAINE

Model Machine

MACSAE210		КАВОВИЙ АВТОМАТ PR PHEDRA EVO CAPP. 9GR 1C3 230/50
44	11035038	DRIP TRAY PHEDRA EVO
44	11035039	DRIP TRAY PHEDRA EVO CSA
45	1602.R02	KEY FOR MERONILOCK
46	11033597	BOX MONEY SLIDE

Model Machine

MACSAE210	**КАВОВИЙ АВТОМАТ PR PHEDRA EVO CAPP. 9GR 1C3 230/50**
MACSAE210.T.0002	**TAVOLA NR. 2 - ARTICOLO КАВОВИЙ АВТОМАТ PR PHEDRA EVO CAPP. 9GR 1C3 230/50**

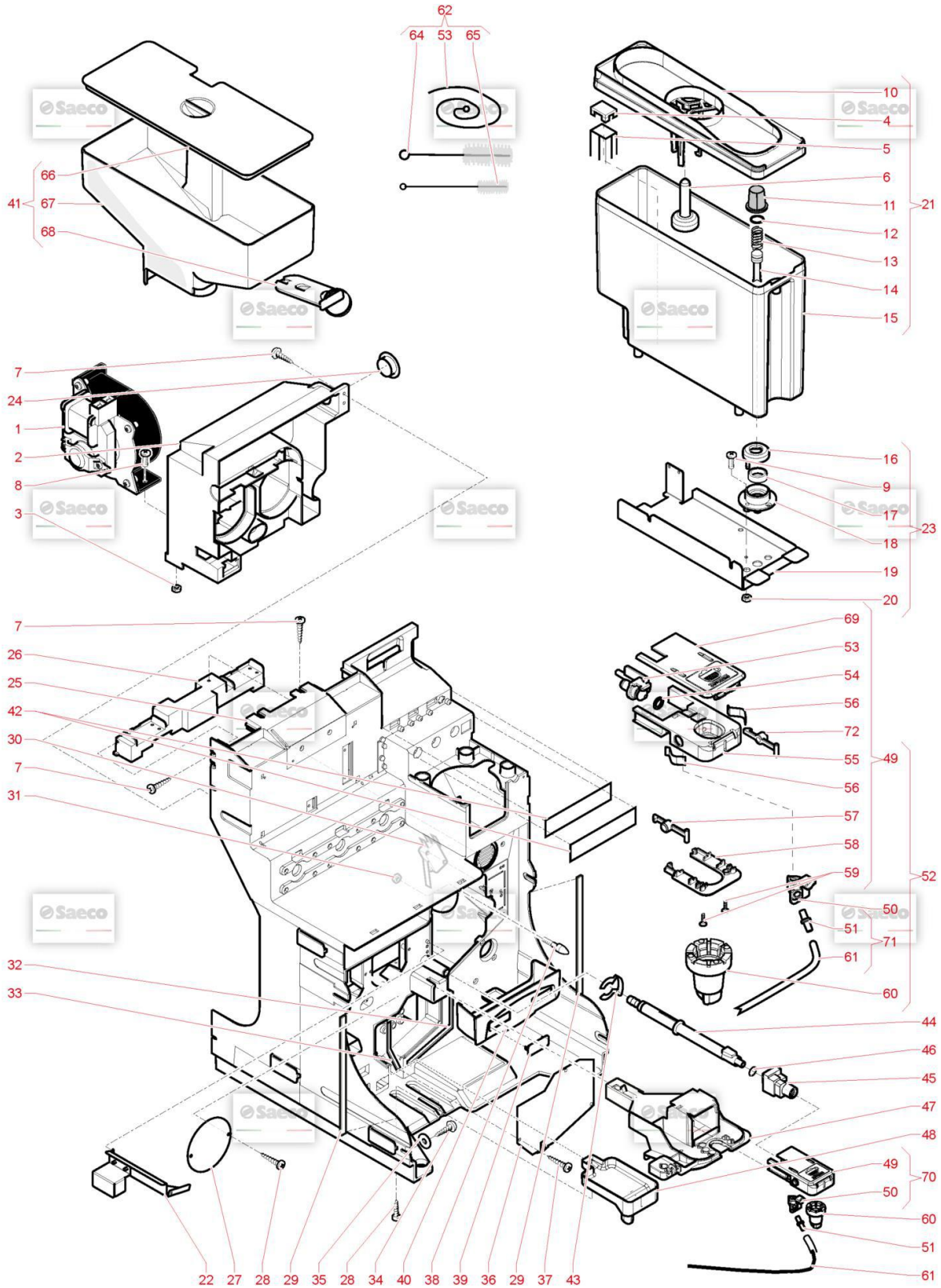

Web	Pos.	Item	Replace by	Description

Model Machine

MACSAE210	КАВОВИЙ АВТОМАТ PR PHEDRA EVO CAPP. 9GR 1C3 230/50

Press - CTRL + CLICK go to item in a new window
Нажмите - Ctrl + правая кнопка мыши что бы открыть запчасть в новом окне

	1	9121.009.00A		MOTOR WITH FAN 230V
	1	9121.009.00F		MOTOR WITH FAN 120V
	2	11007018		5P07 SOLUBLES MOTORS SUPPORT
	3	U324.006		NUT M4 FLANGED INDENTED BASE
	4	9161.050.230		NAT/TRANSP.FLOATING SPACE PLUGMAGIC
	5	9161.112.150		GREY LEVEL FLOAT
	6	11033698		VISUAL FLOAT FOR TANK
	7	U110.005		SCREW AUT.TCB 3,9X9,5 DIN 7981F
	8	12002039		SCREW TCBD TORX 20 M4X12 ZN-B
	8	U046.007		SCREW TEFZ M4,0X12 GALV.
	9	U044.009		SS SCREW TSPC M3,0X8 UNI 7688
	10	11033590		COVER TANK
	11	224640200		WHITE WATER CONTAINER EXT.FILTER ASSY.
	12	140324362		OR ORM 0060-30 SILICONE
	13	126764718		SS WATER CONTAINER VALVE SPRING
	14	147660562	421941089692	GREY PISTON FOR WATER CONTAINER VALVE
	15	11033589		TANK PHEDRA EVO
	16	0701.031.150		GREY WATER VALVE GACO DIM 14 SEAL COVER
	17	145842900		NBR WATER CONT.VALVE GACO DIM14 SEAL
	18	0701.014.150		GREY WATER VALVE GACO DIM 14 SEAL CONT.
	19	11034296		PLATE TANK SUPPORT BLK
	20	U324.005		NUT M3 FLANGED INDENTED BASE
	21	11033803		TANK PHEDRA EVO
	22	11034489		SAFETY CARTER BLK
	23	11033805		TANK SUPPORT
	24	12001070		POLYCAP COVER LPN600-053-IDPE
	25	11033772		PHEDRA EVO MAIN ASSEMBLING PLATE
	26	11008350		UPPER HINGES PLATE
	27	9111.405.060		MIXER HOLE CAP BROWN
	28	U116.006		SCREW AUT.PT TCB 3,5X12 WN 1441 ZNP
	29	11032541		ASIDE PANELS' SPECIAL SEAL
	30	NE05.018		MICROSWITCH
	31	123160502		GALVANIZED NUT M5 HIGH UNI 5587-68
	32	11013140		SEAL FOR DRAIN VAIN PHEDRA L.115
	33	11009240		SEAL FOR DRAIN VAIN PHEDRA
	34	U109.013		SCREW TCB 3,5X13 UNI 6954 NIK
	35	U201.005		PLAIN WASHER 4,3X12 DIN 7349 GAL
	36	11008460		VAIN OF DRAIN COVER PLATE
	37	U142.008		PANELVIT TSP 3,5X12 DIN 7505 AGAL
	38	9011.005		PEG FOR BOILER
	39	9111.481.060		COLUMN CAP
	40	11007799		BOX MIXERS ASPIRATION 5P07
	41	11008835		COFFEE TANK ASSEMBLY 5P07
	42	15001860		ETICHETTA ADESIVA 92X30MM PHEDRA
	43	12001585		BURNISHED/STEEL D=10 SEEGER RING UNI7435
	44	11009476		TUBE FOR CAPPUCCINATORE
	45	11033391		CAPPUCCINATORE OUTPUT STEAM CONNECTOR
	46	NM01.057		OR ORM 0050-20 IN SILICONE
	47	11033385		PHEDRA EVO NOZZLES SUPPORT

LIBERTY UKRAINE

Model Machine

MACSAE210	КАВОВИЙ АВТОМАТ PR PHEDRA EVO CAPP. 9GR 1C3 230/50		
48	11033363		WATER CONVEYOR
49	421941260042		BLK CAPPUCCINATORE S/SCR.V2 RYLO ASSY
50	17000336		MILK INTAKE TUBE CONNECTOR RYL
51	17001362		BLK MILK INTAKE TUBE CONNECT.INS.V2 RYL
52	11034071	11035372	KIT CAPPUCCINATORE PHEDRA EVO
53	17000785		BLACK CAPPUC.INPUT MILK CONNECTOR RYL
54	NM01.028		O-RING 106 SILICONE
55	17000338		BLACK LEFT ENTRY CAPPUCCINAT.CASING RYL
56	263235		TAPER SPRING
57	17000389		GREY LEFT CAPPUCCINATORE INSERT RYL
58	421941278272		BLK LOWER CAPPUCCINATORE LID V2 RYL
59	12000895		SCREW TSP TORX 10 3X10 PLAST.SS
60	11033390	11035360	CAPPUCCINATORE OUTPUT MILK CONNECTOR
61	11034305		SILICONE TUBE 3,5X6 L=640 MM
62	11033704		SACK PHEDRA CAPPUCCINO EVO ACCESSORIES
63	1022.018		SCRAPER ASS.FOR CAPPUCCINAT. TUBE
64	12000431		BRUSH D.12
65	12000430		BRUSH D.6
66	11007015		5P07 COFFEE CONTAINER COVER
67	11007014		COFFEE CONTAINER 5P07
68	11010736		ASS.GUILLOTINE COFFEE
69	263951		
70	11035513		CAPPUCCINATORE V2 MILK INTAKETUBE
71	11034304		TUBE PINL.WONDER PHEDRA EVO
72	17000402		GREY RIGHT CAPPUCCINATORE INSERT RYL

LIBERTY
UKRAINE

Model Machine

MACSAE210	**КАВОВИЙ АВТОМАТ PR PHEDRA EVO CAPP. 9GR 1C3 230/50**
MACSAE210.T.0003	**TAVOLA NR. 3 - ARTICOLO КАВОВИЙ АВТОМАТ PR PHEDRA EVO CAPP. 9GR 1C3 230/50**

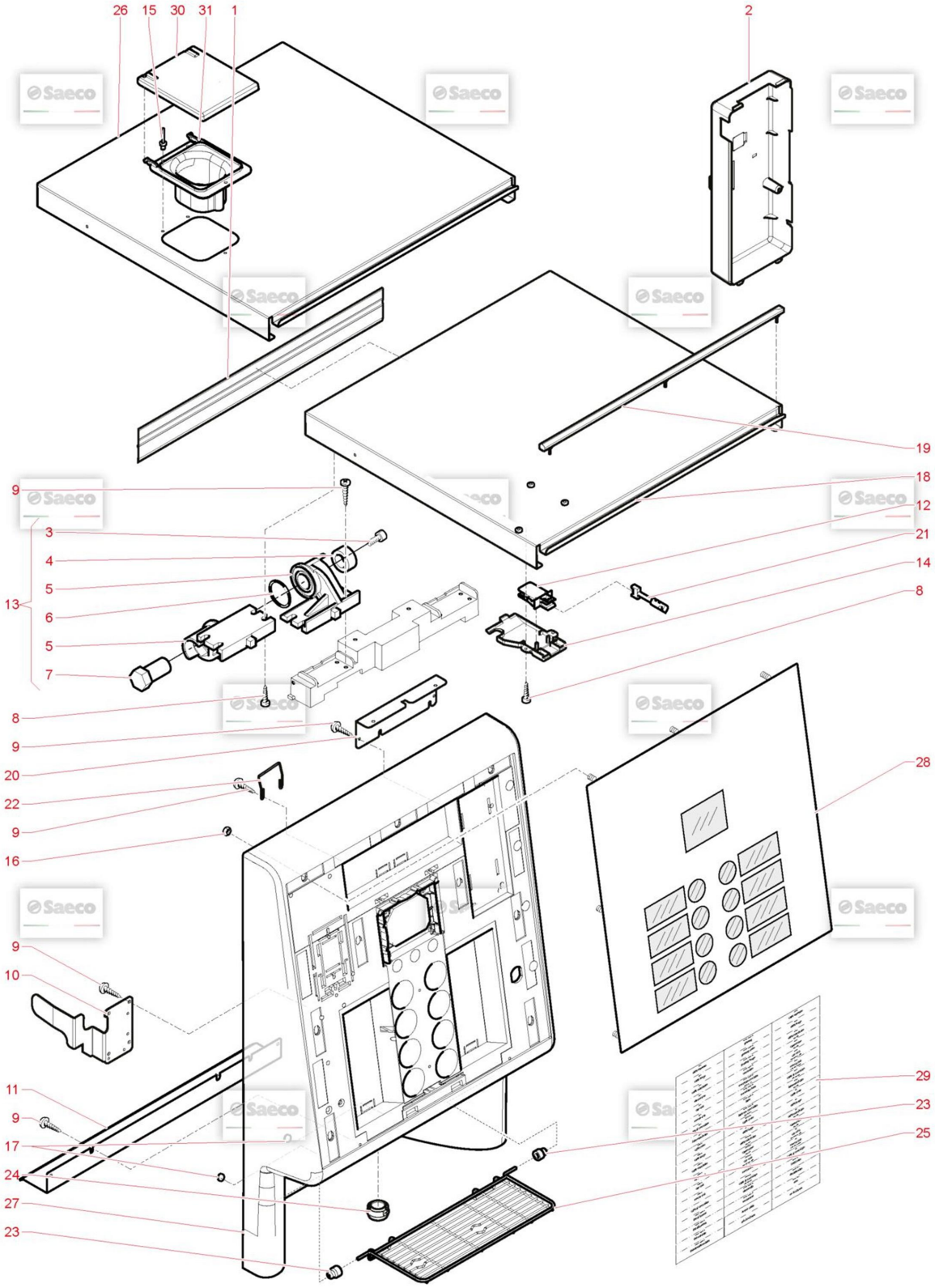

Web	Pos.	Item	Replace by	Description

Model Machine

MACSAE210	КАВОВИЙ АВТОМАТ PR PHEDRA EVO CAPP. 9GR 1C3 230/50

Press - CTRL + CLICK go to item in a new window
Нажмите - Ctrl + правая кнопка мыши что бы открыть запчасть в новом окне

	1	11012465		GUARNIZIONE DEFLUSSO ACQUA X SPORTELLO
	2	11033392		CARTER
	3	U023.019		SCREW TCEI M8X20 UNI 5931 ZIN
	4	11010862		BUSH HINGE 5P07
	5	11007023		HINGE FOR ROOF 5P07
	6	NM01.026		O-RING 121 SILICONE
	7	11008967		PIN FOR HINGE 5P07
	8	12002160		SCREW TMTPH2 3,5X9,5 F ZNP ISO4759/1
	9	U116.006		SCREW AUT.PT TCB 3,5X12 WN 1441 ZNP
	10	11034349		PLATE
	11	11034360		CARTER LED DOOR
	12	NE05.039	NE05.061	BIPOLAR MICROSWITCH
	12	NE05.061		MICROSWITCH CHERRY D413 .V3LD
	13	11008937		ASS.HINGE ROOF 5P07
	14	11033774		SUPPORT FOR MICRO DOOR
	15	NF11.022		EXPANSION RIVET D=2,8X8 ALU. BLACK
	16	U324.003		NUT M5 FLANGED INDENTED BASE
	17	9991.189		MAGNET D.9,5X2 2000 GAUSS
	18	11033400		COVER PHEDRA EVO BLK
	19	11033568		GASKET COVER PHEDRA EVO
	20	11034280		CARTER FOR HARNESS DOOR BLK
	21	11028411		KEY
	22	11007640		SPRING FOR UPPER DOOR MICROSWITCH
	23	11033697		BUSH FIXING GRILL
	24	11033420		HOT WATER OUT CONE
	25	11033395		GRILL FOR PHEDRA EVO
	26	11033606		COVER X TANK BLK
	27	11033364		PHEDRA EVO FRONT DOOR
	27	11034995		PHEDRA EVO FRONT DOOR BLK
	28	20000056		KIT RIC. TASTIERA CAPACITIVAPHEDRA EVO
	29	15004381		PRODUCTS LABEL'S SHEET CRISTALLO EVO ITA
	29	15004382		PRODUCTS LABEL'S SHEET CRISTALLO EVO ENG
	29	15004383		PRODUCTS LABEL'S SHEET CRISTALLO EVO FRA
	29	15004384		PRODUCTS LABEL'S SHEET CRISTALLO EVO DE
	29	15004385		PRODUCTS LABEL'S SHEET CRISTALLO EVO SPA
	29	15004386		PRODUCTS LABEL'S SHEET CRISTALLO EVO POR
	29	15004387		PRODUCTS LABEL'S SHEET CRISTALLO EVO NL
	29	15004670		ADD.LABEL'S SHEET CAPACITIVE KEYBOARD
	30	11033587		COVER FUNNEL TANK
	31	11033588		FUNNEL TANK PHEDRAEVO

LIBERTY UKRAINE

Model Machine

MACSAE210	КАВОВИЙ АВТОМАТ PR PHEDRA EVO CAPP. 9GR 1C3 230/50

MACSAE210.T.0004	TAVOLA NR. 4 - ARTICOLO КАВОВИЙ АВТОМАТ PR PHEDRA EVO CAPP. 9GR 1C3 230/50

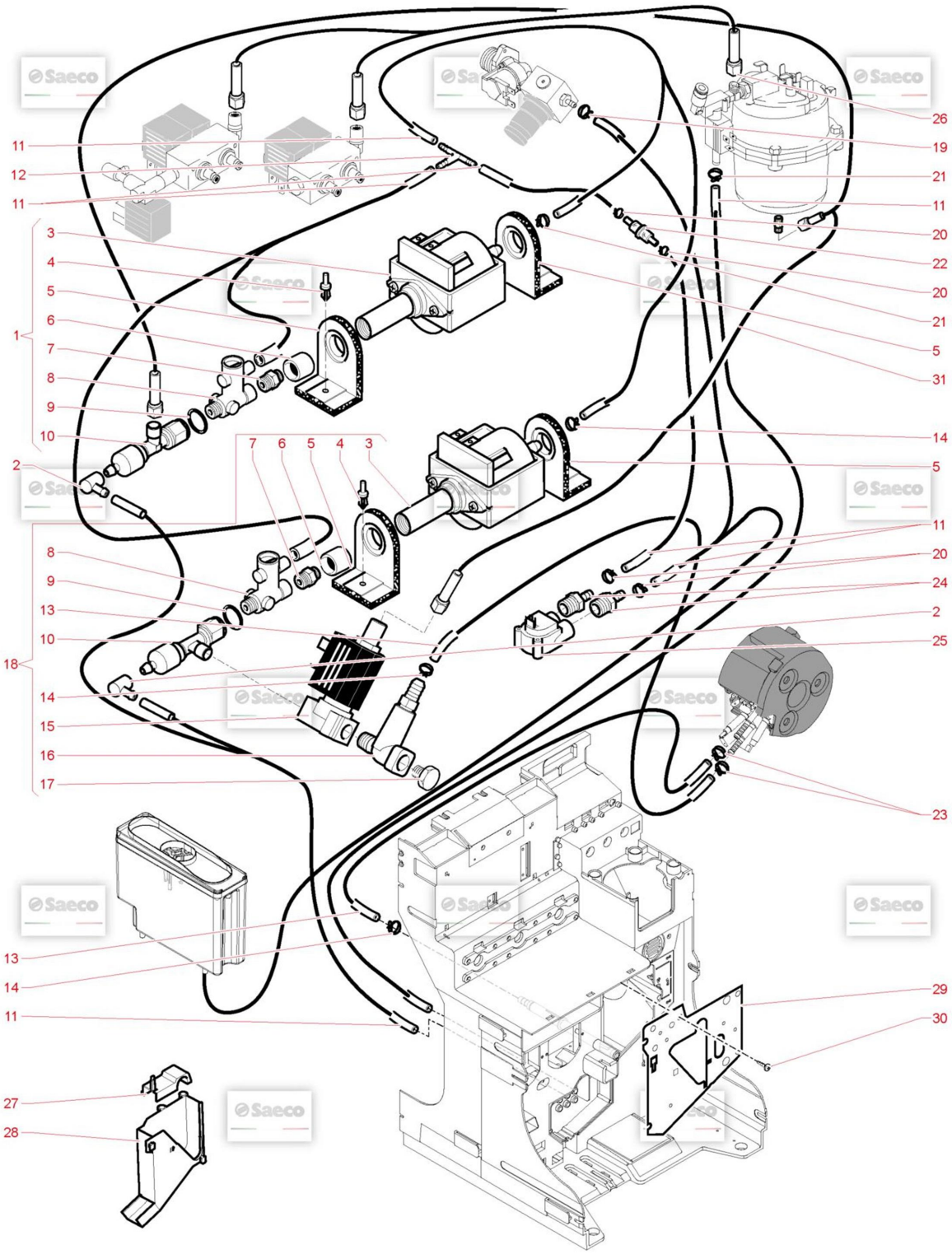

Web	Pos.	Item	Replace by	Description

Model Machine

MACSAE210	КАВОВИЙ АВТОМАТ PR PHEDRA EVO CAPP. 9GR 1C3 230/50

Press - CTRL + CLICK go to item in a new window
Нажмите - Ctrl + правая кнопка мыши что бы открыть запчасть в новом окне

	1	11034297		PUMP EX5-SD1-T3X6-220V 60HZ
	1	11034299		PUMP EP7 PHEDRA EVO TTT 120V
	1	11034310		PUMP EX5 SD1 STDT3X6 230V
	1	11034441		PUMP WT EX5 SD1 STDT3X6 230V
	1	264047		EX5 SD1 T3X6 120V PUMP ASSEMBLY
	2	147920150	252021	90° INLET PUMP CONNECTOR
	3	263761		EX5KEVO/S 230V 50HZ PUMP
	3	9070.034.00F		ULKA PUMP EP7 120V
	3	9070.042.00F		PUMP 120V
	3	9070.042.00N		PUMP 220V
	4	NF11.005		RIVET ITW D.5,5
	5	149185850		EATON PUMP SUPPORT 4002012 MAGIC
	6	9071.098		REINFORCEMENT FOR ULKA PUMP
	7	11032615		FITTING ADAPTER VALVE
	8	20007360	20007401	BYPASS VALVE FLUID-O-TECH B7E
	9	140321961		O-RING 2031 NFDA NBR 70 FDA
	10	11005590		SAFETY VALVE/NON RETURN ASS. NEW
	11	9972.246		SILICONE TUBE 5X10 L.2000MM
	12	NV99.004		CONNECTOR T MORONI 8026047 D=8
	13	9972.202	9972.246	SILICONE TUBE 5X10 L.320MM
	14	NV99.087		BAND D=11/11,6
	15	11032651		EV 3 VIE N.C.2F/1M 1/8"18BAR D.1,1-1,7
	16	11008017	11035276	SAFETY VALVE 3,5 -4 BAR
	17	12001169		BRASS CAP 1/8 GAS CONICAL TEA
	18	11034295		PUMP EP7 PHEDRAEVO TTT CAPP. 230V
	18	11034298		PUMP EP7 PHEDRAEVO TTT CAPP.120V
	18	11034300		PUMP EX5 SD1 CAPP.T3X6 230V
	18	11034440		CAPPUCCINO PUMP WT EX5 SD1 T3X6 230V
	19	184320200		SPRING HOSE CLAMP D=9,5MM
	20	NV99.072		HOSE CLAMP D. 11.6/12.3
	21	NV99.077		TUBE-TIGHTENING CLAMP D=9.8/10.6
	22	11032038	11036374	FILTER INTAKE IN LUNG WATER SUPPLY
	23	NV99.036		HOSECLAMP D=8,5 09993.41.00
	24	11009215		RUBBER HOLDER FOR FILTER
	25	NV99.033		TURBINE IN PLASTIC
	26	11025301		TEFLON TUBE 3X6 L.220 1/8"-1/8
	27	9161.262.060		DRIP CHANNEL COVER
	28	9111.597.050		COFFEE DISCHARGE CHANNEL SHORT
	29	11013925		DRIP CANAL PLATE PHEDRA V2
	30	U142.008		PANELVIT TSP 3,5X12 DIN 7505 AGAL
	31	11025295		TEFLON TUBE 3X6 L.170 1/8"-1/8

LIBERTY UKRAINE

Model Machine

MACSAE210	**КАВОВИЙ АВТОМАТ PR PHEDRA EVO CAPP. 9GR 1C3 230/50**
MACSAE210.T.0005	**TAVOLA NR. 5 - ARTICOLO КАВОВИЙ АВТОМАТ PR PHEDRA EVO CAPP. 9GR 1C3 230/50**

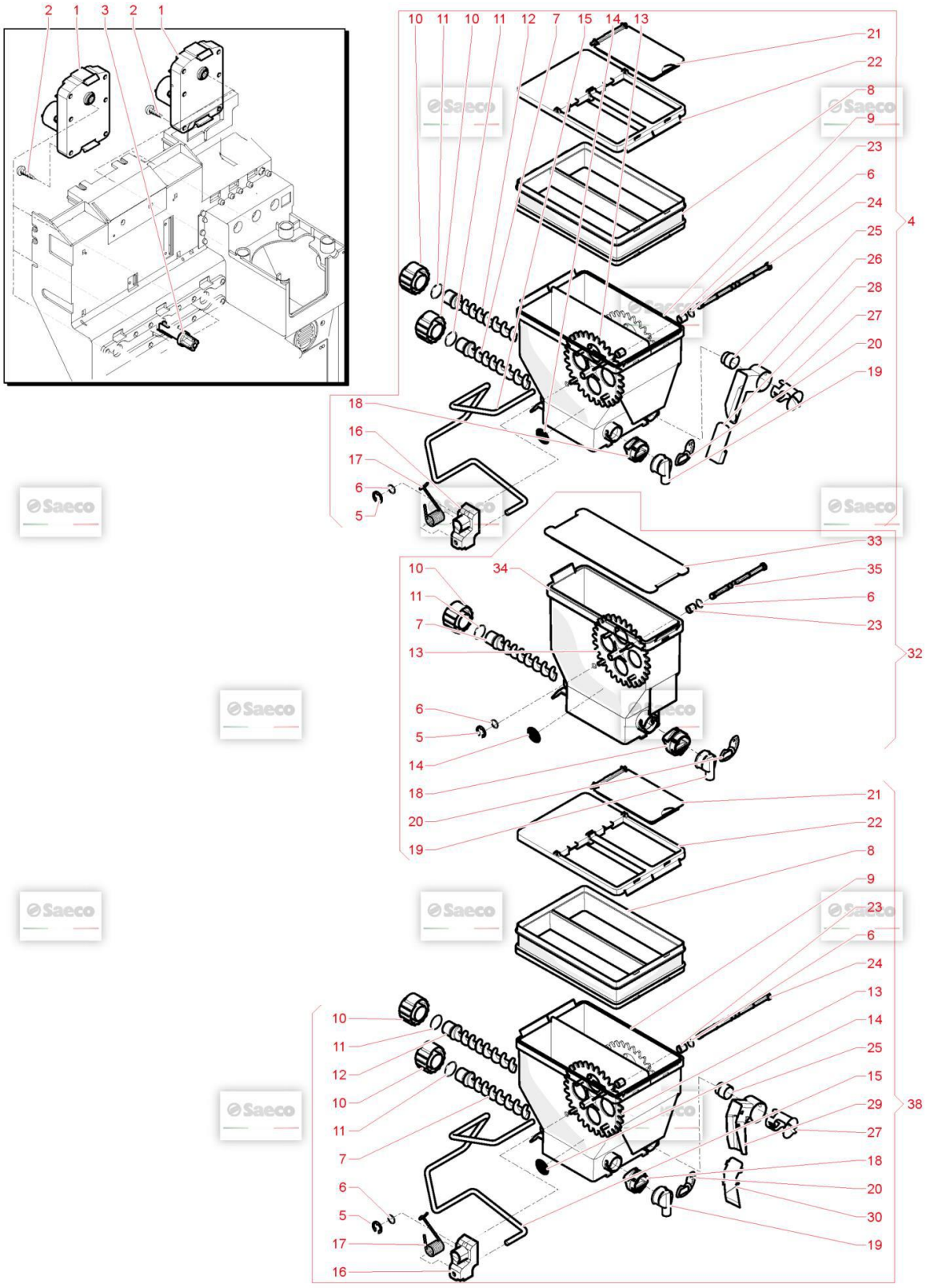

Web	Pos.	Item	Replace by	Description

Model Machine

MACSAE210	КАВОВИЙ АВТОМАТ PR PHEDRA EVO CAPP. 9GR 1C3 230/50

Press - CTRL + CLICK go to item in a new window
Нажмите - Ctrl + правая кнопка мыши что бы открыть запчасть в новом окне

	1	11033287		RATIOMOTOR 80 RPM K85 24VDC
	2	U109.002		NIK.SCREW TCB 3,5X25 DIN 7981C
	3	9111.586.050		PIN FOR MOTORS KENTA
	4	11007162		5P07 ASSEMBLED DOUBLE TANK
	5	U701.003		SNAP RING 7 UNI 7434
	6	NM03.022		OR ORM 0060-10 NBR
	7	9111.701		SCROLL SCREW DOUBLE CONTAINER
	8	11007016		40MM SOLUBLES CONTAINER PROLONG
	9	9111.680		BASE CONTAINER DOUBLE SOLUBLE
	10	11012130		BACK BUSH REINFORCE
	11	NM03.013		OR 2,3X15 NBR
	12	11001658		SCROLL SCREW
	13	9111.702		WHEEL DOUBLE CONTAINER
	14	9111.646		ADHESIVE FOR TANK
	15	11006124		WIRE AGITATOR UNIFIED
	16	11007155		AGITATOR SUPPORT
	17	9111.731		SPRING
	18	9111.630.060		BUSH FOR POWDERS TANK
	19	9111.629.060		APERTURE FOR SOLUBLES HOPPER
	20	9111.338.270		BULKHEAD FOR APERT. CLOSURE ORANGE
	21	9111.683		SOLUBLE COVER
	22	9111.682		COVER CONTAINER DOUBLE SOLUBLE
	23	11032945		SPACE FOR GEAR BPA FREE
	24	9111.703		DOUBLE PIN FOR WHEEL
	25	11001654		BUSH CONTAINER
	26	9111.425.060		POWDER DUCT
	27	9111.457.060		BUSH FOR LEFT/RIGHT DUCT COSMEC
	28	9111.428.060		PLUG FOR LEFT-RIGHT DUCT
	29	11013385		SWITCH FOR PHEDRA TTT
	30	11013386		COVER FOR SWITCH PHEDRA TTT
	31	11034361		PHEDRA TTT ASSEMBLED DOUBLE TANK
	32	11007972	11031901	ASSEMBLY SOLUBLES CONTAINER
	33	11007974		COVER CONTAINER SOLUBLE
	34	11001576		BASE CONTAINER SINGLE SOLUBLE
	35	11001580		PIN WHEEL CONTAINER SINGLE SOLUBLE

LIBERTY UKRAINE

Model Machine

MACSAE210	**КАВОВИЙ АВТОМАТ PR PHEDRA EVO CAPP. 9GR 1C3 230/50**
MACSAE210.T.0006	**TAVOLA NR. 6 - ARTICOLO КАВОВИЙ АВТОМАТ PR PHEDRA EVO CAPP. 9GR 1C3 230/50**

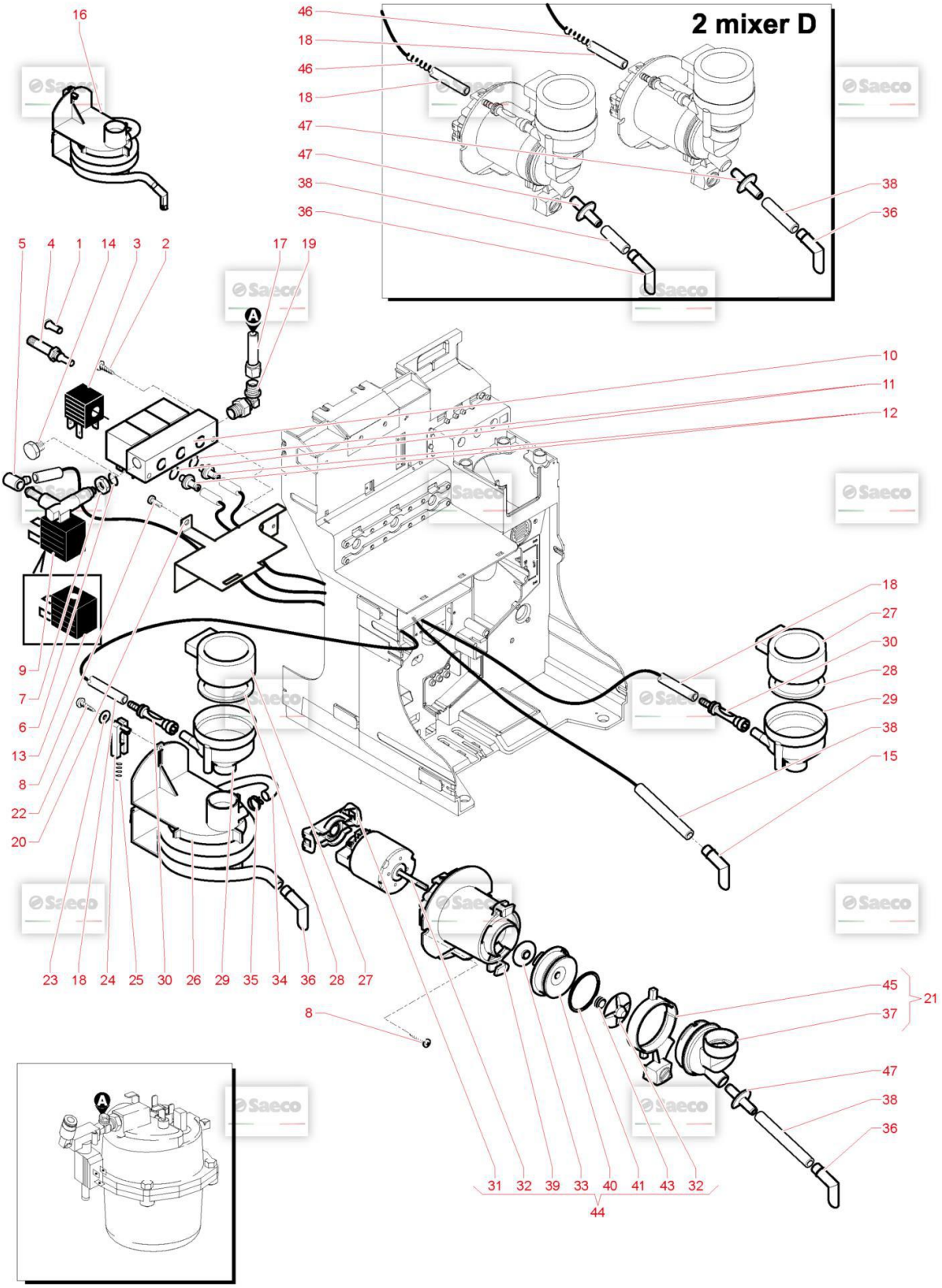

Web	Pos.	Item	Replace by	Description

Model Machine

MACSAE210	КАВОВИЙ АВТОМАТ PR PHEDRA EVO CAPP. 9GR 1C3 230/50

Press - CTRL + CLICK go to item in a new window
Нажмите - Ctrl + правая кнопка мыши что бы открыть запчасть в новом окне

	1	20007305		SPARE EV MOBILE CORE 11023762
	2	U109.021		SCREW AUT.TCB 3,5X22 DIN 7981C
	3	20005373		SOLENOID X HS1 11023762
	4	20005374		ASS.NUCLEO FIS+MOB.X 11009225
	5	147920150	252021	90° INLET PUMP CONNECTOR
	6	140321462		O-RING 2018 SILICONE
	7	9991.035		NUT 1/8 H 4.5
	8	U116.006		SCREW AUT.PT TCB 3,5X12 WN 1441 ZNP
	9	11027286		ELETTROVALVE 24V DC TEA
	10	11033567		BLOCK 3 SOLENOID DC
	11	NM01.004		OR 2025 SILICONE
	12	11011453		RUBBER HOLDER CONNECTOR TEA
	13	0862.R03		COIL FOR SOLENOID VALVE 2 WAY
	14	12001169		BRASS CAP 1/8 GAS CONICAL TEA
	15	11033591		NOZZLE HOT WATER
	16	11008891		ASS.MIXER THE' 5P07
	17	11025301		TEFLON TUBE 3X6 L.220 1/8"-1/8
	18	9972.246		SILICONE TUBE 5X10 L.2000MM
	19	12001181		BICONICAL CONNECT. L M 1/8X06TEA
	20	11033393		SUPPORT
	21	9110.027.060		MIX CASING ASS.
	22	U116.005		SCREW AUT.PT TCB 3,0X8 WN 1441
	23	U207.004		PLAIN WASHER 4,3X16 UNI 6592 GAL
	24	9111.209.060		CURSOR FOR SPIRAL MIXER FIXING
	25	9111.211		SPRING FOR MIXER CURSOR
	26	9111.643.060		RAPID FIXING MIXER
	27	9111.010.060		LID FOR FUNNEL BROWN
	28	9111.011.060		SEAL FOR FUNNEL BROWN
	29	9111.009.060		FUNNEL FOR POWDERS BROWN
	30	1863.A07		ESPRESSO NOZZLE
	31	9111.771.270		MOTOR COUPLING ORANGE RAL
	32	9121.248.00P		MIXER MOTOR '05 24V DC
	33	9111.773.060		MOTOR PROTECTION RING
	34	9972.055		SILICONE TUBE 7X11 L.2000MM
	35	NV99.072		HOSE CLAMP D. 11.6/12.3
	36	1813.109.050		NOZZLES
	37	9111.227.060		MIXER CASING
	38	9972.057		SILICONE TUBE 5X8 L.2000MM
	39	9111.769.150		MIXER FLANGE
	40	9111.770.060		COVER MIXER FLANGE
	41	NM03.012		OR ORM 0320-25 NBR
	42	9111.772.060		DISK FAN
	43	NM05.015		V-RING MIXER '05
	44	9110.160.06P		ASS.MIXER '05 24V DC
	45	9111.230.270		MIXER LOCKING RING NUT ORANGERAL
	46	11013722		SPRING FOR TUBE L.85,5MM
	47	9111.232.060		STD TUBE HOLDER SLEEVE

LIBERTY UKRAINE

Model Machine

MACSAE210	**КАВОВИЙ АВТОМАТ PR PHEDRA EVO CAPP. 9GR 1C3 230/50**
MACSAE210.T.0007	**TAVOLA NR. 7 - ARTICOLO КАВОВИЙ АВТОМАТ PR PHEDRA EVO CAPP. 9GR 1C3 230/50**

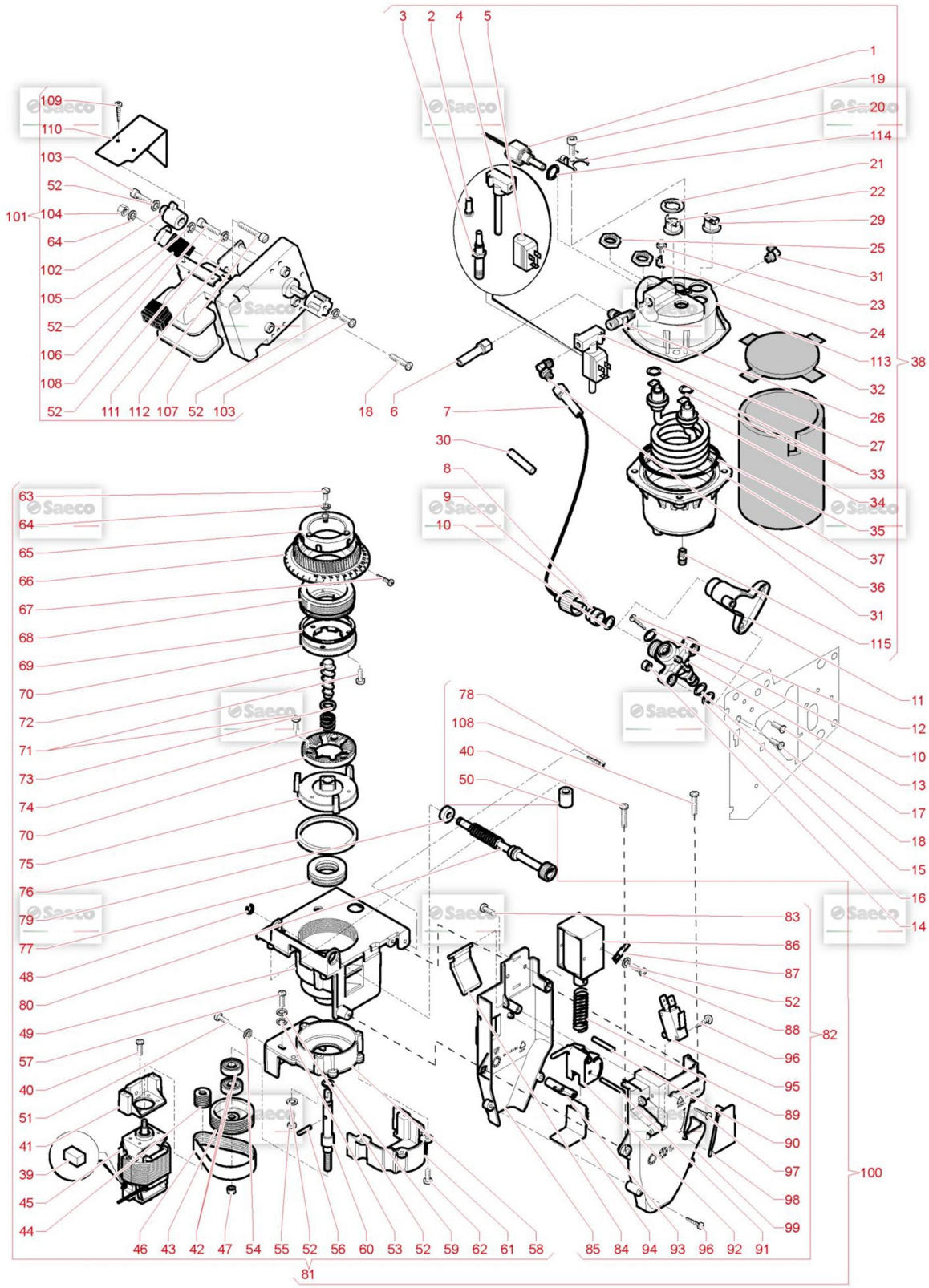

Web	Pos.	Item	Replace by	Description

Model Machine

MACSAE210	КАВОВИЙ АВТОМАТ PR PHEDRA EVO CAPP. 9GR 1C3 230/50

Press - CTRL + CLICK go to item in a new window
Нажмите - Ctrl + правая кнопка мыши что бы открыть запчасть в новом окне

	1	11033134		IMMERSION PROBE
	2	20007362		SPARE CORE EV ODE
	3	20007363		SPARE EVT ODE
	4	20007364		SPARE EVT 11032408
	5	20007361		SOLENOID EVT ODE
	6	11025296		TEFLON TUBE 3X6 L.250 1/8"-1/8
	7	11025406		TUBE ASSEMBLY TEFLON 3X6 L.250MM
	8	11005743		KNURLED FEMALE HAND BOLT M14
	9	11005741		CONNECTOR D.6
	10	140321462		O-RING 2018 SILICONE
	11	11013431		PHEDRA TTT SLEEVE TTT CIRCUIT
	12	U109.037		SCREW AUT.TCB 4,8X13 DIN 7981C
	13	11005370		PIN FOR MUFF
	14	U302.003		GALV.NUT HEXAGONAL M4 UNI 5589ZN
	15	11013173		OR ORM 0090-20 FKM 80 FD GREENPEROXIDA
	16	11013174		OR ORM 0050-20 FKM 80 FD GREENPEROXIDA
	17	U044.022		SCREW TSPC M5,0X8 UNI 7688 GALV.
	18	U044.013		SCREW TSPC M4,0X12 UNI 7688 GALV.
	19	12001052		SCREW TCEI M4,0X6 DIN 912 ZIN
	20	226830200		RETAIN.SPRING 3 THERM. +THERMAL FUSE
	21	9991.085		THERMOSTAT FIXING WASHER
	22	NE09.021		THERMOSTAT 150°NC FASTON 90°
	23	U023.020		SCREW TCEI M6X20 UNI 5931 ZIN
	24	NE15.031		MALE TONGUE PLAIN 6,3 D.6,3
	25	9991.029		NUT FOR RESISTOR
	26	11011454		"T" CONNECTOR FOR BOILER TEAT"" CONNECTOR FOR BOILER TEA
	27	11032408		ELECTROVALVE ODE 3 WAYS 24V DC
	28	11025295		TEFLON TUBE 3X6 L.170 1/8"-1/8
	28	11025301		TEFLON TUBE 3X6 L.220 1/8"-1/8
	28	11028994		TEFLON TUBE 3X6 L.120 1/8"-1/8
	28	11034432		TEFLON TUBE 3X6 L.150 1/8"-1/8
	29	189428700		THERMOSTAT 175° 1NT-15L-5126
	30	11025342		TUBE ASS.TEFLON 4X6 L.400 1/8"-1/8"
	31	12001181		BICONICAL CONNECT. L M 1/8X06TEA
	32	11030777		COFFEE BOILER 600CC UPPER ISOLATOR
	33	11000972		OR 3050 FKM 80 FD PEROXIDICA
	34	11007591		RES CALD. V230 W1400 INC.800
	34	11033952		RES CALD. V230 W1400 INC.800
	35	NM04.010		OR ORM 0730-40 FPM 70+-5 IRHDBLACK
	36	11030779		COFFEE BOILER 600CC UPPER ISOLATOR
	37	11033133		LOWER CASING BOILER 300CC TEA
	38	11033301	20000024	BOILER CAPPU. PHEDRA 300CC 230V 1400W
	38	11033984		BOILER PHEDRA 300CC 120V 1400W
	38	11034262	20000034	BOILER PHEDRA 300CC 230V 1400W
	38	11034263	20000033	BOILER PHEDRA 300CC 120V 1400W
	38	11034430	20000034	BOILER PHEDRA EVO WT 300CC 230V 1400W
	38	11034431	20000024	BOILER WT CAPPU. PHEDRA 300CC230V 1400W
	39	20007420		MOTOR BRUSH

LIBERTY UKRAINE

Model Machine

MACSAE210	КАВОВИЙ АВТОМАТ PR PHEDRA EVO CAPP. 9GR 1C3 230/50		
40	12002039		SCREW TCBD TORX 20 M4X12 ZN-B
41	11027163		MOTOR SUPPORT GRINDERS D.48
42	11025696		BEARING RTP 608-2Z
43	11025689		PULLEY D.40 "GRIND 48"
44	11025690		PULLEY D.15 "GRIND 48"
45	11027396		COFFEEGRINDER MOTOR D.48 230V
45	11027810		COFFEEGRINDER MOTOR D.48 120V
45	262435		COFFEE GRINDER MOTOR D.48 230V
46	11032130		BELT GRINDER COFFEE
47	U310.004		NUT SELF LOCK.M6 UNI 7473
48	U701.011		STEEL SNAP RING 5 UNI 7434
49	11027162		GRINDERS CAP D.48
50	1813.046.050		RUBBER GRIND SUPPORT
51	U023.004		SCREW TCEI M6,0X12 UNI 5931 GALV.
52	128310404		WASHER UNI 8842 A4 BURNISHED
53	U207.004		PLAIN WASHER 4,3X16 UNI 6592 GAL
54	U208.006		TOOTHED WASHER 6,4X11 UNI 3703
55	12001700		SCREW TCB M4X30 UNI 7687 ZNP
56	11025921		POWER PLUG UNI-EN 28743 D.3X14
57	12002052		ZN-B TCB SCREW M4X16
58	11027164		MOTOR SUPPORT GRINDERS D.48
59	140321662		O-RING 2021 SILICONE
60	11025693		CENTRAL PIN "GRIND 48"
61	11027186		SHELL CLOSURE BELT
62	U127.010	129573402	SCREW TAPT.TCB M4,0X10 DIN 7500C
63	U043.023		SCREW TCBC M3,0X18 UNI 7687 GALV.
64	U208.002		TOOTHED WASHER 3,3X5,8 UNI 3703 G
65	11032110		BUSH
66	11032640		STOP GRIND X ATL700 TTT D.48
66	1813.103.A20		RING NUT OF GRIND REGULATION
67	U109.004		SCREW AUT.TCB 4,8X9,5 DIN 7981C
68	11025692		UPPER GRINDING DISK HOLDER "GRIND 48"
69	12001617		OR 3206 NBR
70	11021838		FLAT MILL D.48 TEA
71	U043.007		SCREW TCBC M3,0X8 UNI 7687 GALV.
72	11025695		INCREASE SCREW "GRIND 48"
73	11027418		SPACER FOR SCREW OF INCREASE
74	11025694		SPRING "GRIND 48"
75	11025691		LOWER GRINDING DISK HOLDER "GRIND 48"
76	11027451		FELT RING DE=47,4 DI=41,4H=4
77	11025699		BEARING RTP 51104
78	U116.006		SCREW AUT.PT TCB 3,5X12 WN 1441 ZNP
79	1813.159		ANTIVIBRATION RUBBER
80	1813.104.A20		ADJUSTMENT SCREW WITH TUBE HOLDER
81	11027396		COFFEEGRINDER MOTOR D.48 230V
81	11029193		COFFEE GRINDER D.48 120V 60HZ
81	11031412		COFFEE GRINDER D.48 TTT
81	262434		COFFEE GRINDER ASS.
82	11034032		DOSER ASS. 6-11 GR.120V UL
82	1813.A10.A2A	11034030	DOSER ASS. 6-11 GR.
82	262436		6-11 DOSER ASS.

LIBERTY UKRAINE

Model Machine

MACSAE210	КАВОВИЙ АВТОМАТ PR PHEDRA EVO CAPP. 9GR 1C3 230/50		
83	12002151		TSP SCREW M3X4 UNI 7688 SS
84	1813.042.A20		DISPENSER PALLET
85	11033266		DISPENSER SHELL
86	262463		DOSER ELECTRO-MAGNET
86	9121.235.00A		ELECTROMAGNET FOR DISPENSER WITH NUCLEUS
86	9121.235.00F		ELECTROMAGNET X DISPENSER W/NUCLEUS 120V
87	NE15.003		MALE TONGUE PLAIN 6,3 D.5,2
88	129821402		TCB SCREW M3X4 UNI 7687 ZNP
89	1813.127		SPRING FOR ELECTROMAGNET
90	1813.092		PIN
91	1813.091		PIN FOR DISPENSER REGOLATION
92	1813.043.A20		DISPENSER REGOLATION
93	1813.078.A20		ADJUSTMENT LEVER
94	1813.044.A20		PALLET FOR REGOLATION
95	NE05.062		MICROSWITCH + WHEEL
96	U116.004		SCREW AUT.PT TCB 3,0X16 WN 1441
97	12000390		SCREW AUT.TCB 2,9X25 DIN 7981C NIK
98	1813.191.A20		DISPENSER COVER
99	11033265		OUTSIDE SHELL DISPENSER
100	11027395	11035044	COFFEE GRINDER D.48 + DISPENCER
100	11031411	11035727	COFFEE GRINDER D.48 + DISPENCER
100	11035046		COFFEE GRINDER D.48+DISPENCER120V CRS
100	11035755		COFFEE GRINDER D.48 + DISPENCER EVO
100	264048		GRINDER ASSEMBLY D.48 + DOSER
101	11008960		RATIOMOTOR 230V 5P07
101	11023412		RATIOMOTOR PHEDRA TTT 120V CSA
101	11027117		RATIOMOTOR PHEDRA TTT 230V
101	264049		120V GEAR MOTOR ASSEMBLY
102	11003525		CAM COFFEE GROUP FRESH BREW
102	9991.037		CAM FOR RATIOMOTOR 1 MICRO
103	129824002		TCB SCREW M4X10 UNI 7687 ZNP
104	U302.002		NUT HEXAGONAL M3 UNI 5588
105	NE05.066		MICROSWITCH CHERRY D419Q1A
106	9991.014		CARD FOR MICRO SWITCHES
107	11032817	11035557	RATIOMOTOR 30 PACK 230/240-50
107	11032818	11035558	RATIOMOTOR 30 PACK 120/60
107	11035557		RATIOMOTOR 30 PLAST.P.F. 230/240-50
107	11035558		RATIOMOTOR 30 PACK 120/60
108	129825502		TCB SCREW M4X25 UNI 7687 ZNP
109	129511903		SCREW TCB 2,9X6,4 DIN 7981 BZNICK
110	11014251		CENTRAL UNIT MOTOR STEEL CARTER
111	11003524		PLATE FOR MICRO RATIOMOTOR
111	9991.015		PLATE FOR MICRO
112	U034.001		SCREW TCI M3,0X30 UNI 6107 GALV.
112	U034.003		SCREW TCI M3,0X20 UNI 6107 GALV.
113	11033131		UPPER CASING BOILER 300CC TEA
114	11033220		OR ORM 2043 FKM 80 FD GREEN PEROXIDA
115	9991.059		STRAIGHT BICONE CONNECTOR M 1/8X06

LIBERTY UKRAINE

Model Machine

MACSAE210	**КАВОВИЙ АВТОМАТ PR PHEDRA EVO CAPP. 9GR 1C3 230/50**
MACSAE210.T.0008	**TAVOLA NR. 8 - ARTICOLO КАВОВИЙ АВТОМАТ PR PHEDRA EVO CAPP. 9GR 1C3 230/50**

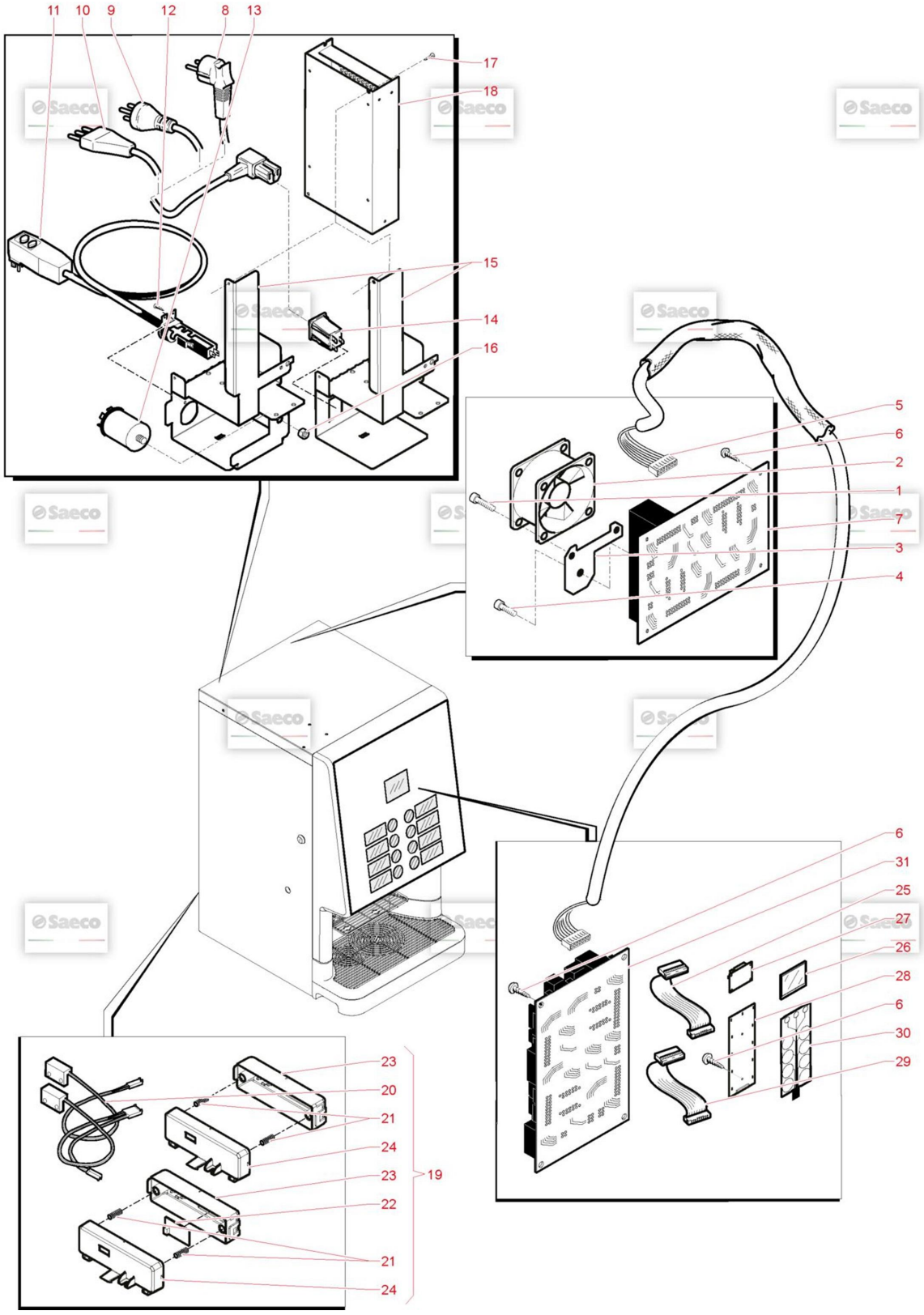

Web	Pos.	Item	Replace by	Description

Model Machine

MACSAE210	КАВОВИЙ АВТОМАТ PR PHEDRA EVO CAPP. 9GR 1C3 230/50

Press - CTRL + CLICK go to item in a new window
Нажмите - Ctrl + правая кнопка мыши что бы открыть запчасть в новом окне

	1	U143.022		SCREW T.M.T. K.F.R. 3,5X9,5 ZNP
	2	11025054		FAN 40X40X20 24V
	2	11034389		HARNESS CONNECTIONS SENSORS W/TANK
	3	11024107		PHEDRA MAINBOARD COOLING FAN SUPP.PLATE
	4	129511803		SCREW TCB 2,9X6,4 DIN 7981 NICK
	5	11033720		POWER SUPPLY HARNESS PW PORT PT
	5	11033995		POWER SUPPLY HARNESS PW PORT PT 120V
	6	U116.006		SCREW AUT.PT TCB 3,5X12 WN 1441 ZNP
	7	11033318		POWER PHEDRA EVO
	8	NE01.050		CABLE SCHUKO WITH PLUG EN60320C1
	9	NE01.053		CABLE AUSTRAL. +PLUG EN60320 C13
	9	NE01.093		CABLE ARGENTINA + PLUG EN60320C13
	10	17800019		BLACK POWER CABLE BRAZIL L=1200
	10	NE01.051		CABLE SWITZERLAND WITH PLUG EN603
	11	11012009		POWER CABLE USA 3 POLE 15A X GFC8
	12	U110.005		SCREW AUT.TCB 3,9X9,5 DIN 7981F
	13	184651500		LOCKING SCREW ANTIDISTURB FILTER 16A
	14	187850400		TRIPOLE SOCKET SELF-LOCKING
	15	11033980		PLATE ELECTRONICS PARTS PHEDRAEVO 120V
	15	11034010		SUPPORT ELECTRICAL PARTS PHEDRA EVO
	16	U302.007		NUT HEXAGONAL M8 UNI 5588
	17	U110.004		SCREW AUT.TCB 3,5X6,5 DIN 7981F
	18	12002120		SWITCHING DELTA PMT-24V-150W-1A
	19	11034303		TRAY SENSOR WATER AND GROUND
	19	11034870		TRAY SENSOR WATER AND GROUND WT
	20	11033722		HARNESS CONNECTIONS SENSORS
	21	12000881		COMPRESSION SPRING D.6,7 FILO0,6 L=23,5
	22	11003232		AS.CPU+SW WATER LEVEL SENSOR V2
	23	11033409		WATER LEVEL SENSOR CURSOR
	24	11033408		WATER LEVEL SENSOR SUPPORT
	25	11033714		HARNESS INTERFACE+DISPLAY
	26	11032399		3,5" TFT DISPLAY 320X240
	27	11032383		HW INTERF. NEW TFT DISPLAY UMSH-8252MD-T
	28	11033316		TASTIERA CAPACITIVA PHEDRA EVO
	29	11033775		HARNESS LED PHEDRA EVO
	30	11033283	11035861	CAPACITIVE ADHESIVE CIRCUIT 11KEYS
	31	11033766	11036542	CPU+SW PHEDRA EVO
	31	11034765	11036543	CPU+SW PHEDRA EVO NO PAYMENTS

LIBERTY UKRAINE

Model Machine

MACSAE210	КАВОВИЙ АВТОМАТ PR PHEDRA EVO CAPP. 9GR 1C3 230/50
MACSAE210.T.0009	TAVOLA NR. 9 - ARTICOLO КАВОВИЙ АВТОМАТ PR PHEDRA EVO CAPP. 9GR 1C3 230/50

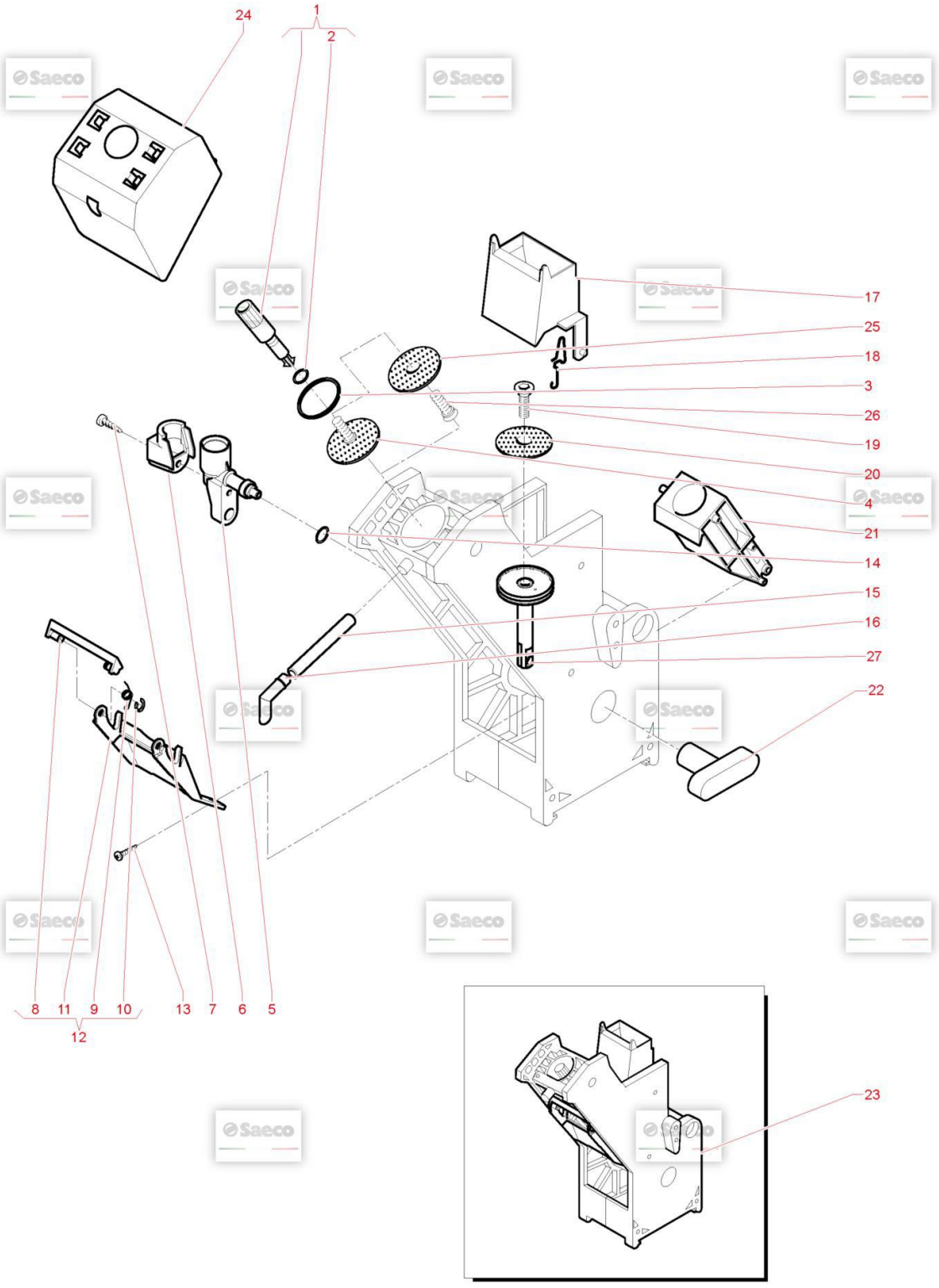

Web	Pos.	Item	Replace by	Description

Model Machine

MACSAE210	КАВОВИЙ АВТОМАТ PR PHEDRA EVO CAPP. 9GR 1C3 230/50

Press - CTRL + CLICK go to item in a new window
Нажмите - Ctrl + правая кнопка мыши что бы открыть запчасть в новом окне

1	**9169.A14.060**	PIN FOR PERCOLATOR BROWN
2	**NM02.006**	OR R5 TERMOIL
3	**140322061**	O-RING 4112 EPDM
4	**324000100**	SS PERCOLATOR D=34 SCREW FOR UNIT
5	**11005371**	UNIT COFFEE MUFF
6	**11010013**	CARTER FOR MUFF PREHEATING UNIT
7	**129512921**	SCREW TCB TORX 10 AB 2,9X13 SHEET SS
8	**9111.537.060**	BROWN SCRAPER COFFEE GROUP
9	**9111.520**	SPRING FOR SCRAPER SECTION 0.6
10	**U701.006**	SNAP RING 3,2 UNI 7434
11	**9111.539.060**	FORK FOR SCRAPER
12	**9110.067.060**	SCRAPER ASS.FOR CAPPUCCINAT. TUBE
13	**U110.013**	SCREW AUT.TCB 3,9X6,5 DIN 7981F
14	**140321462**	O-RING 2018 SILICONE
15	**9972.057**	SILICONE TUBE 5X8 L.2000MM
16	**1813.109.050**	NOZZLES
17	**322001201**	MOBILE SCRAPER BROWN NARROW
18	**9161.425**	SPRING FOR SCRAPER
19	**129851921**	TSP SCREW M3X6 UNI 7688 SS
20	**324000200**	SS PERCOLATOR D=34 FOR UNIT
21	**222711101**	BROWN GROUND COFF.CONTAINER D=36 ASSY.
22	**9161.021.060**	KEY FOR BREW UNIT BROWN
23	**11023330**	BREW UNIT 7 GRAMS
24	**11013053**	CARTER FOR DOSER UNIT
25	**11012630**	PERCOLATOR D.34
26	**129852821**	TSP SCREW M3X14 UNI 7688 SS
27	**322001050**	COFF. GROU. EXP. BLACK D=36 FOR UN

LIBERTY
UKRAINE

Model Machine

MACSAE210	**КАВОВИЙ АВТОМАТ PR PHEDRA EVO CAPP. 9GR 1C3 230/50**
MACSAE210.T.0010	**TAVOLA NR. 10 - ARTICOLO КАВОВИЙ АВТОМАТ PR PHEDRA EVO CAPP. 9GR 1C3 230/50**

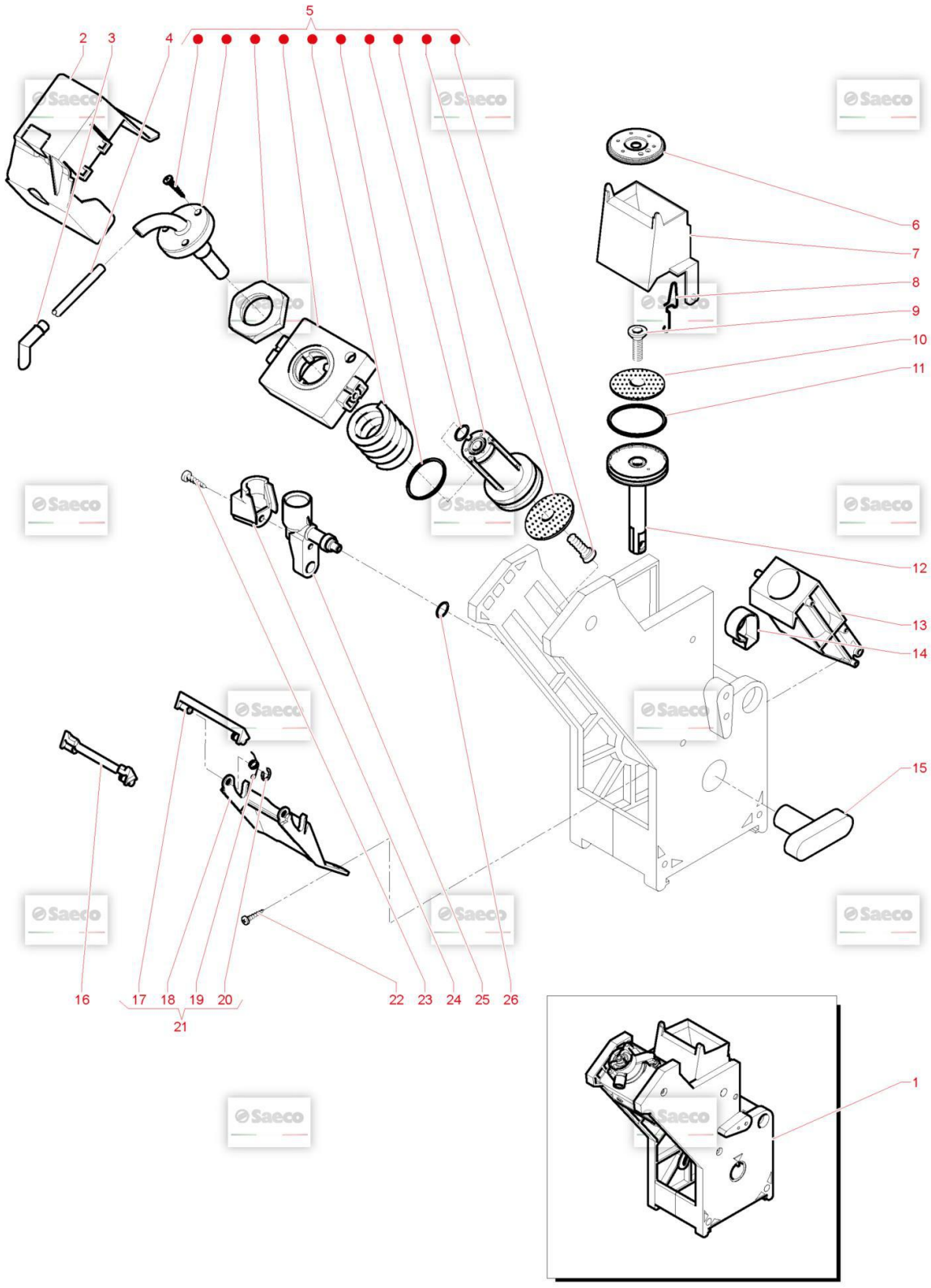

Web	Pos.	Item	Replace by	Description

Model Machine

MACSAE210	КАВОВИЙ АВТОМАТ PR PHEDRA EVO CAPP. 9GR 1C3 230/50

Press - CTRL + CLICK go to item in a new window
Нажмите - Ctrl + правая кнопка мыши что бы открыть запчасть в новом окне

	1	11031863		BREWING UNIT ASS. 7GR GUSTO
	2	11029737		PROTECTION VALVE
	3	1813.109.050		NOZZLES
	4	9972.285	9972.206	SILICONE TUBE 3.5X6 L.220 MM
	5	20007811		HEAD GROUP
	6	11030122		SPACE
	7	322001201		MOBILE SCRAPER BROWN NARROW
	8	9161.425		SPRING FOR SCRAPER
	9	129851921		TSP SCREW M3X6 UNI 7688 SS
	10	324000200		SS PERCOLATOR D=34 FOR UNIT
	11	140322500		O-RING 2118 NITRIL RUBBER
	12	11029879		ASS.PISTONE X GRUPPO CAFFE'
	13	222711101		BROWN GROUND COFF.CONTAINER D=36 ASSY.
	14	11030309		RING FOR CAM
	15	9161.021.060		KEY FOR BREW UNIT BROWN
	16	11012957		SCRAPER FOR COFFEE UNIT 7-9GR.
	17	9111.537.060		BROWN SCRAPER COFFEE GROUP
	18	9111.539.060		FORK FOR SCRAPER
	19	9111.520		SPRING FOR SCRAPER SECTION 0.6
	20	U701.006		SNAP RING 3,2 UNI 7434
	21	9110.067.060		SCRAPER ASS.FOR CAPPUCCINAT. TUBE
	22	U110.013		SCREW AUT.TCB 3,9X6,5 DIN 7981F
	23	129512921		SCREW TCB TORX 10 AB 2,9X13 SHEET SS
	24	11010013		CARTER FOR MUFF PREHEATING UNIT
	25	11005371		UNIT COFFEE MUFF
	26	140321462		O-RING 2018 SILICONE

LIBERTY
UKRAINE

Model Machine

MACSAE210	**КАВОВИЙ АВТОМАТ PR PHEDRA EVO CAPP. 9GR 1C3 230/50**
MACSAE210.T.0011	**TAVOLA NR. 11 - ARTICOLO КАВОВИЙ АВТОМАТ PR PHEDRA EVO CAPP. 9GR 1C3 230/50**

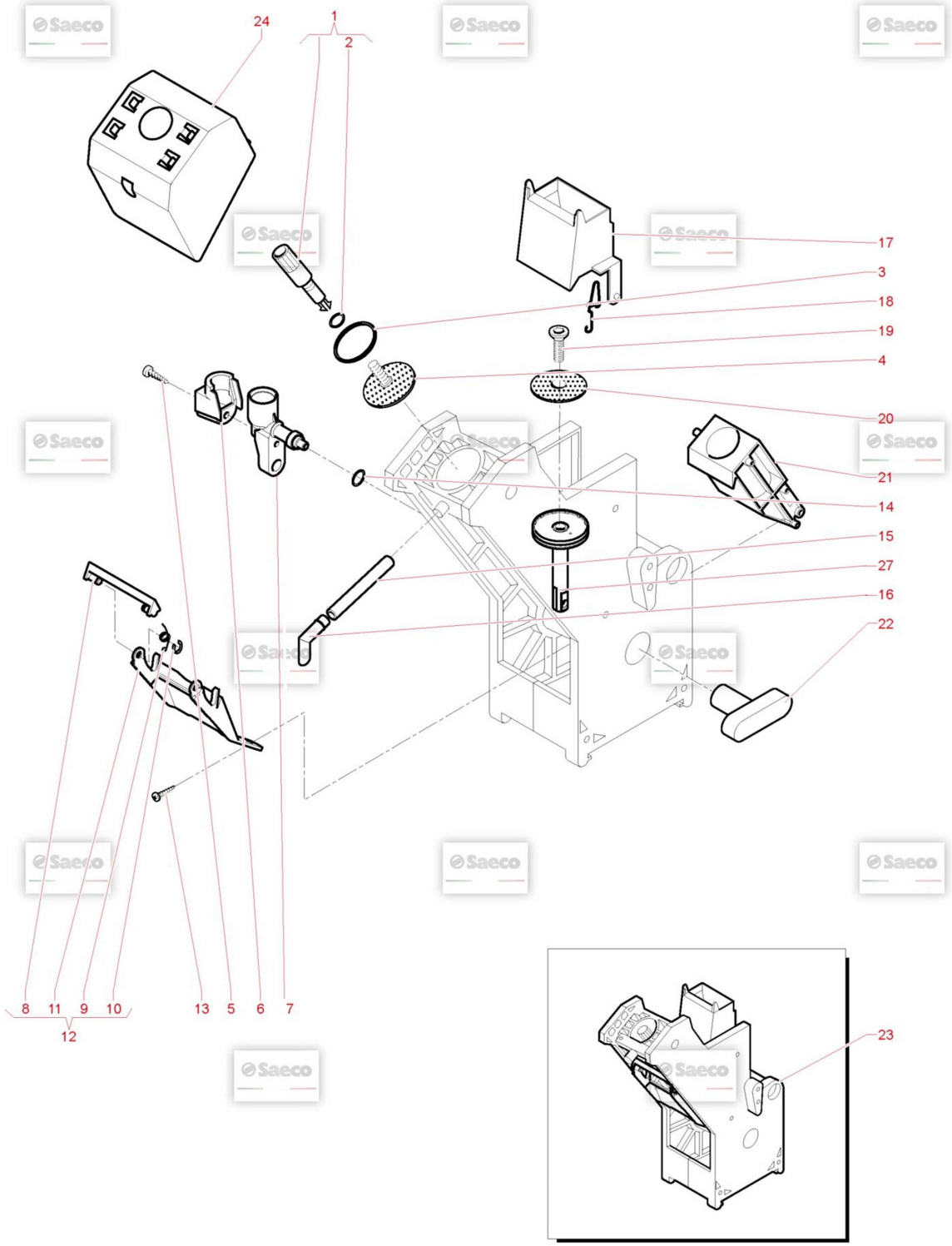

Web	Pos.	Item	Replace by	Description

Model Machine

MACSAE210	КАВОВИЙ АВТОМАТ PR PHEDRA EVO CAPP. 9GR 1C3 230/50

Press - CTRL + CLICK go to item in a new window
Нажмите - Ctrl + правая кнопка мыши что бы открыть запчасть в новом окне

1	**9169.A14.150**	PIN FOR PERCOLATOR GREY
2	**NM02.006**	OR R5 TERMOIL
3	**NM01.044**	OR ORM 0320-40 SILICONE PTFE/FDA
4	**9161.036**	UPPER PERCOLATOR FOR UNIT
5	**129512921**	SCREW TCB TORX 10 AB 2,9X13 SHEET SS
6	**11010013**	CARTER FOR MUFF PREHEATING UNIT
7	**11005371**	UNIT COFFEE MUFF
8	**9111.537.150**	GREY SCRAPER COFFEE GROUP
9	**9111.520**	SPRING FOR SCRAPER SECTION 0.6
10	**U701.006**	SNAP RING 3,2 UNI 7434
11	**9111.539.150**	FORK FOR SCRAPER
12	**9110.067.150**	SCRAPER ASS.FOR CAPPUCCINAT. TUBE
13	**U110.013**	SCREW AUT.TCB 3,9X6,5 DIN 7981F
14	**140321462**	O-RING 2018 SILICONE
15	**9972.057**	SILICONE TUBE 5X8 L.2000MM
16	**1813.109.050**	NOZZLES
17	**322001259**	MOBILE SCRAPER GREY NARROW
18	**9161.425**	SPRING FOR SCRAPER
19	**129851921**	TSP SCREW M3X6 UNI 7688 SS
20	**9161.037**	LOWER PERCOLATOR FOR UNIT
21	**11002626**	ASS. COFFEE CONTAINER GREY 9 GR.
22	**9161.021.060**	KEY FOR BREW UNIT BROWN
23	**11005422**	BREW UNIT 9 GRAMS
24	**11013053**	CARTER FOR DOSER UNIT
25	**322005050**	GROU.. EXPULS. BLACK D=40 UNIT9GR

LIBERTY
UKRAINE

Model Machine

MACSAE210	**КАВОВИЙ АВТОМАТ PR PHEDRA EVO CAPP. 9GR 1C3 230/50**
MACSAE210.T.0012	**TAVOLA NR. 12 - ARTICOLO КАВОВИЙ АВТОМАТ PR PHEDRA EVO CAPP. 9GR 1C3 230/50**

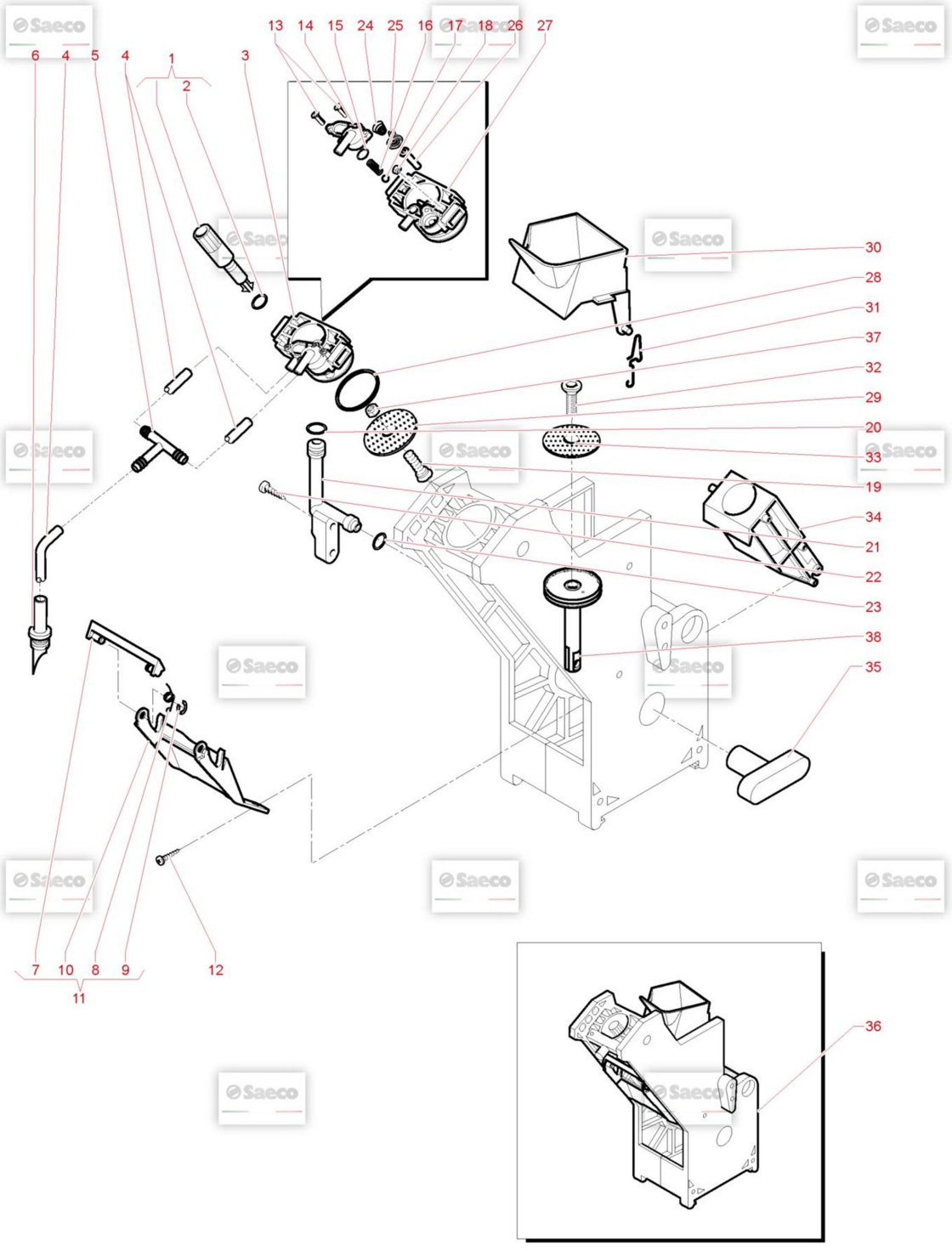

Web	Pos.	Item	Replace by	Description

Model Machine

MACSAE210	КАВОВИЙ АВТОМАТ PR PHEDRA EVO CAPP. 9GR 1C3 230/50

Press - CTRL + CLICK go to item in a new window
Нажмите - Ctrl + правая кнопка мыши что бы открыть запчасть в новом окне

	1	9169.A14.150		PIN FOR PERCOLATOR GREY
	2	NM02.006		OR R5 TERMOIL
	3	11007343		ASS.COUNTERPISTON FRESH-BREW
	4	9972.057		SILICONE TUBE 5X8 L.2000MM
	5	11007493	11036602	T CONNECTOR FOR BOILER P604
	6	9111.348		STRAIGHT DISPENSING NOZZLE
	7	9111.537.150		GREY SCRAPER COFFEE GROUP
	8	9111.520		SPRING FOR SCRAPER SECTION 0.6
	9	U701.006		SNAP RING 3,2 UNI 7434
	10	9111.539.150		FORK FOR SCRAPER
	11	9110.067.150		SCRAPER ASS.FOR CAPPUCCINAT. TUBE
	12	U110.013		SCREW AUT.TCB 3,9X6,5 DIN 7981F
	13	U109.030		SCREW AUT.TCB 2,9X16 DIN 7981C
	14	11003470		LID X COUNTERPISTON FRESH-BREW
	15	NM02.013		OR ORM 0080-15 TERMOIL
	16	11028830		SPRING FOR FS400 COVER CHASSIS
	17	12001650		SPHERE TEFLON D.5
	18	U302.003		GALV.NUT HEXAGONAL M4 UNI 5589ZN
	19	129852821		TSP SCREW M3X14 UNI 7688 SS
	20	140320461		OR ORM 0080-20 TERMOIL
	21	322000559		WATER FLOW PISTON GREY
	22	129512921		SCREW TCB TORX 10 AB 2,9X13 SHEET SS
	23	140321462		O-RING 2018 SILICONE
	24	11002603		SPING FOR MEMBRANE
	25	11002625		MEMBRANE
	26	11003471		PIN FOR MEMBRANE FRESH-BREW
	27	11003469		COUNTERPISTON FRESH-BREW
	28	NM01.044		OR ORM 0320-40 SILICONE PTFE/FDA
	29	9161.167		PERCOLATOR D.35,8
	30	11003529		HOPPER DOSER UNIT FRESH BREW
	31	126836618		SPRING H=28 NEW FOR SCRAPER
	32	129851921		TSP SCREW M3X6 UNI 7688 SS
	33	9161.037		LOWER PERCOLATOR FOR UNIT
	34	11002626		ASS. COFFEE CONTAINER GREY 9 GR.
	35	9161.021.150		KEY FOR BREW UNIT GREY
	36	11007283		BREW UNIT 10GRAMS FRESH BREW
	37	U301.003		NUT HEXAGONAL M3 UNI 5587
	38	322005050		GROU.. EXPULS. BLACK D=40 UNIT9GR

LIBERTY UKRAINE

Model Machine

MACSAE210	**КАВОВИЙ АВТОМАТ PR PHEDRA EVO CAPP. 9GR 1C3 230/50**
MACSAE210.T.0013	**TAVOLA NR. 13 - ARTICOLO КАВОВИЙ АВТОМАТ PR PHEDRA EVO CAPP. 9GR 1C3 230/50**

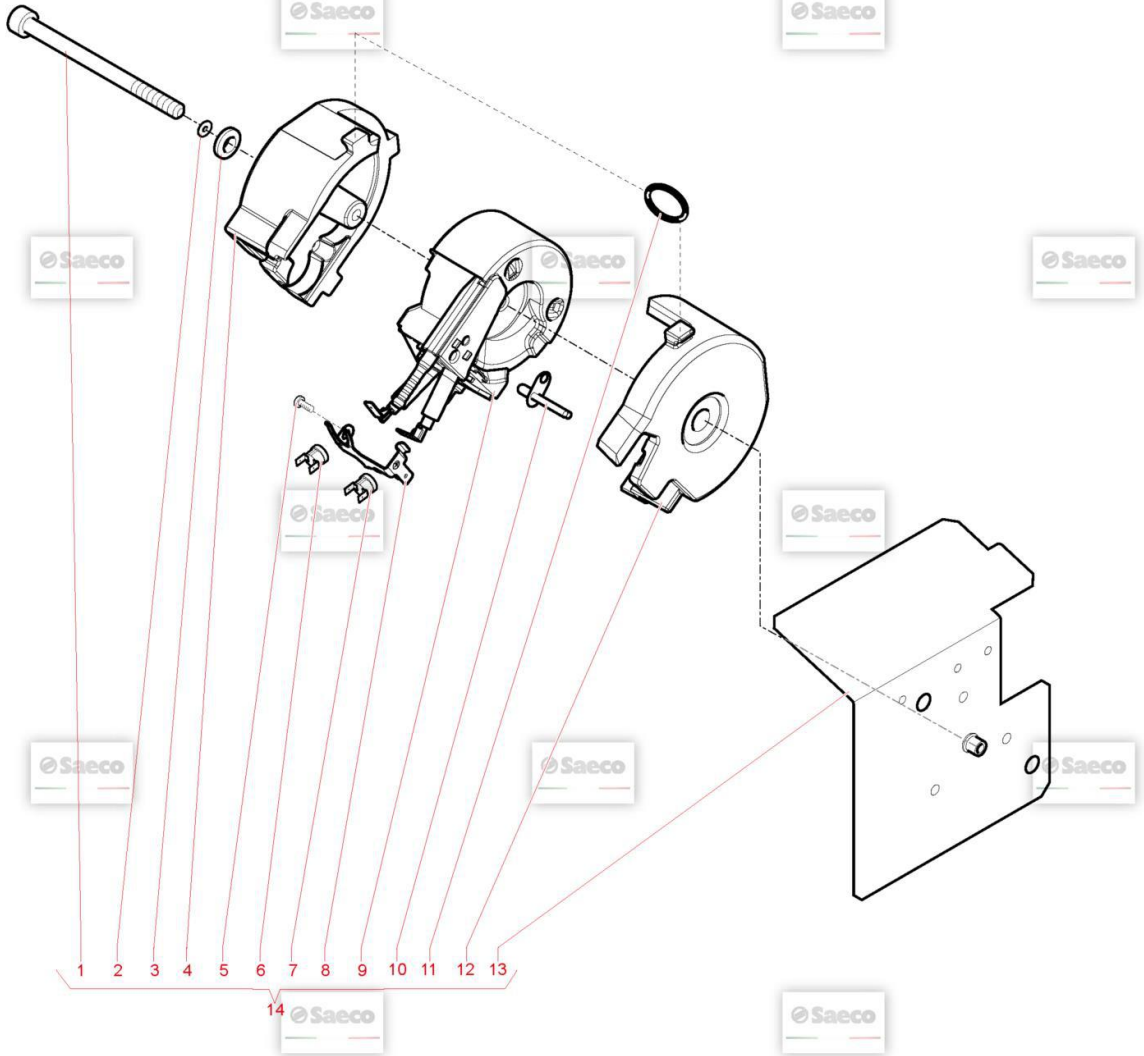

Web	Pos.	Item	Replace by	Description

Model Machine

MACSAE210	КАВОВИЙ АВТОМАТ PR PHEDRA EVO CAPP. 9GR 1C3 230/50

Press - CTRL + CLICK go to item in a new window
Нажмите - Ctrl + правая кнопка мыши что бы открыть запчасть в новом окне

	1	12001395		SCREW TCEI M5,0X65 UNI 5931 8.8 B
	2	U207.001		PLAIN WASHER 5,3X10 UNI 6592 GAL
	3	11013945		SPACER FASIT D.EXT.11 D.INT.5,5 #3
	4	263941		TERMOBLOCK THERMAL INSULATIONREAR SHELL
	5	129573202		SCREW TCB TORX 20 M4X8 AUTOFORMING ZN-B
	6	11005558		THERMOSTAT 190° NC FASTON 90°
	7	12000804		THERMOSTAT 190° 1NT-08L-6067
	8	421944012251		STEEL BOILER THERMOS.FIXING SPRING TRX1
	9	11033552		V4 TUB.BOILER 1300W 120V CULUS
	9	421944024121		TUB.BOILER XS4 1300W 230V ASSY.
	10	11009589		STEAM PROBE SG650
	11	NM03.013		OR 2,3X15 NBR
	12	263940		TERMOBLOCK THERMAL INSULATINGFRONT SHELL
	13	11013311		PHEDRA BOILERS SUPPORT PLATE
	14	11033551		PHEDRA BOILERS SUPPORT PLATE 120V
	14	A26395000	263950	RICAMBIO ASS.SUPP.CALDAIA85A007800

LIBERTY
UKRAINE